TRANSMITTAL

Tighe&Bond

Project No.: C.5112.001
Date: June 30, 2023

Re: The Charlton School – Phase 1A Campus Improvements

To: Jay Wilkinson, Chairperson
Town of Charlton Planning Board
758 Charlton Road
Charlton, NY 12019

Copy: Alex Capo, Charlton School
Peter Urban, Balzer & Tuck Architecture

☐ **FOR SIGNATURE** ☐ **FOR FILE** ☐ **AS REQUESTED** ☒ **FOR REVIEW** ☐ **PLEASE REPLY**

NO. COPIES	DESCRIPTION
1	Electronic Compiled Submission
10	Narrative
10	Full Size Site Plan, including: - Building Elevation Drawings - Landscaping and Lighting Plan
10	State Environmental Quality Review (SEQR) Full Environmental Assessment Form (FEAF) Part 1 with Supplementary Information
10	Agricultural Data Statement

Please see the compiled materials for a preliminary site plan review submission for the Charlton School Phase 1A improvements located at 322 Lake Hill Road in the Town of Charlton, Saratoga County, New York, 12027.

Very truly yours,

T&B Engineering and Landscape Architecture, P.C.

Arica McCarthy
Planner

C.5112.001
June 30, 2023

Jay Wilkinson, Chairperson
Town of Charlton Planning Board
758 Charlton Road
Charlton, NY 12019

Re: **The Charlton School – Phase 1A Campus Improvements**
Application for Site Plan Approval

Dear Chairman Wilkinson:

On behalf of The Charlton School (herein referred to as the "Applicant"), Tighe & Bond, whose services in New York are provided by T&B Engineering and Landscape Architecture, P.C. (Tighe & Bond), is providing the Town of Charlton Planning Board a preliminary Site Plan submission for review of The Charlton School's Phase 1A proposed improvements (herein referred to as the "Project"). The proposed improvements are assumed to be a Type I action under the State Environmental Quality Review Act (SERQA) based on the fact the project will result in alteration of more than 2.5 acres within an agricultural district per 6 NYCRR 617.4 (b)(8). The intent of this preliminary submission is to provide adequate information to allow the Town Planning Board to circulate its intent to be Lead Agency under SEQRA as part of the coordinated review for a Type I action. To support this submission, this narrative is being provided to give the Board context on the existing and proposed conditions of the Campus. The following materials are also being provided to support the Board's review:

- SEQRA Full Environmental Assessment Form (FEAF) Part 1 with Supplementary Information (Appendix A)
- Preliminary Plan Set, dated June 2023 (Appendix B)
- Agricultural Data Statement (Appendix C)

We understand the Town does not have a site plan application form. This letter is intended to provide basic information regarding the subject parcel. Several other agencies will grant approvals as part of Phase 1A project. The County Health Department and NYSDEC will approve water and septic systems for the site, respectively. The Project falls within 500-ft of a county right-of-way and is within an Agriculture District; therefore, the submission will need to be provided to the Saratoga County Planning Department for a 239-m review. The Dormitory Authority of the State of New York (DASNY) will be providing funding for a portion of the project.

The Applicant has provided the Town the $300 Site Plan Review fee under separate cover. As requested by the Planning Board Clerk and Chairman, 10 full size copies of the Preliminary Plan Set along with the other listed materials are provided for the Town's review.

Existing Conditions

The Charlton School (the "School") was founded in 1895 with the majority of the campus expansions occurring in the 1950's through the 1970's. Much of the infrastructure is original to the 1960's construction upgrades; however, recent evaluations have determined the campus is in need of facilities investment, and as a result, the School worked with Balzar & Tuck Architecture (the Project's architect) to develop a 20-year Master Plan for the School. The campus is located at 322 Lake Hill Road in the Town of Charlton, Saratoga County, New

York, 12027, and has tax parcel identification number 256.-1-38. The parcel is located in the Town's Residential Agriculture (R/A) zone and, as a private school, it is a permitted use. The 267-acre campus, with facilities generally sited within a 20-acre area (herein referred to as the "site"), currently serves 41 students (i.e., 29-residential and 13-day program students), see the Location Map in Appendix A.

The campus buildings consist of the Ketchum Grande School, Hawley Cottage, Clemens Cottage, Sheibley Cottage, chapel, maintenance buildings, sheds, pavilion, administration building, wood garage and barns, equine building, wood garage, and a business office building. The School has an equine therapy program which includes a horse barn and multiple horse paddocks. Please refer to Sheet C-100 of Appendix B for the Campus' existing layout with the aforementioned buildings.

Existing Site Infrastructure and Utilities

The campus is in a rural location but is served by municipal water from the Charlton Water District #1, of which water is sourced from the Town of Glenville. Wastewater facilities consist of on-site septic systems. The site is located within the Town of Charlton MS4. National Grid provides electric and natural gas to the campus. The campus has a roadway network with three entrances off Lake Hill Road, a County Route. The campus roadway network is narrow and does not adequately accommodate bus and emergency service vehicles. The campus provides limited off-street parking spaces for faculty, staff, and visitors.

Proposed Conditions

In 2020, based on support from the School Board of Trustees, the Master Plan was progressed to an evaluation of infrastructure and building improvements and planning level costs for new facilities, including necessary upgrades to campus infrastructure and to provide new dormitory facilities. This application is for Phase 1A campus upgrades and will consist of the following for building improvements:

- Demolish the Maintenance Building and Clemens Cottage on the east side of the campus
- Demolish the wood garage and barn on the west side of the campus
- Remove 14,239 square feet of existing driveway
- Clear 21,876 square feet of existing wooded area
- Construct four (4) new dormitory cottages and a new maintenance building (22,282 square feet of new building footprint)
- Install related infrastructure upgrades to serve the new building and facilitate future expansion
- Construct 32,003 square feet of new access driveway, parking, and pedestrian walkways to service the new buildings
- Reconfigure the paddock space to accommodate the new construction

Please refer to Sheets C-200 and C-300 of Appendix B to see the demolition and layout plan. All the improvements are permitted for the School within the R/A zoning district. There will be 4.20-acres physically disturbed to construct the site improvements. This acreage consists of clearing, demolition, utilities, and the new building layout. To assist the Board's visualization of the proposed new buildings (dormitories and maintenance building), the drawing set includes elevation drawings, prepared by Balzar & Tuck Architecture, for both the new dormitories and the new maintenance facility. To give the Board context of the landscaping and lighting to support the campus' new layout, drawings were included as Sheets

L100 and L101 in Appendix B. Landscaping will be consistent with what exists at the campus. Proposed lighting will be downward facing, and fully shielded.

Table 1
Proposed Building Features Summary

	Dormitory Building (Typ. of 4)	**Maintenance Building**
Proposed Building Footprint (square feet)	4,048	6,090
Height (feet)	22	28
Dimensions (feet)	98 x 54	92 x 82
Use	Student Residences	Maintenance
Bedrooms	9 per building	N/A
Exterior building materials*	Exposure Fiber Cement Lap Siding	Insulated Metal Wall Panel

*See Sheets A201-204 in Appendix B

Site Utilities and Infrastructure

As for new campus infrastructure and utilities, Phase 1A will also consist of the following improvements:

- Implement five (5) stormwater management areas
- Reconfigure the driveway to coordinate with new campus layout
- Upgrade/abandon utility lines to service new buildings

New water mains, from the existing private campus service, will continue to be served by municipal water from the Charlton Water District #1, on-site septic systems, and electric and natural gas from National Grid. More specifically, the wastewater generated by the new dormitory buildings and maintenance garage will be treated by new septic systems. The anticipated water usage and wastewater generation proposed for the new dormitories and maintenance buildings post Phase 1A construction is 3,050 gallons per day (GPD). Design of the on-site septic systems is in progress.

Phase 1A will result in 0.76-acres of impervious surfaces on the campus. To handle the additional stormwater runoff from the development, five (5) rain gardens and/or infiltration basins will be constructed to mitigate, treat, and recharge the stormwater runoff from the project site. Design of the on-site stormwater management facilities is in progress.

The site is characterized by narrow driveways and a park-like campus. Driveway widths will be increased to 24-feet near the dormitories to facilitate emergency service access. Where access driveways are less than 20 feet, pavement width will be 12 feet and 8-feet of turf reinforcing will be used to achieve a 20-foot lane width while minimizing impervious area. For the proposed roadway, see Sheet C-300 of Appendix B, 225.21 linear feet will be widened to 24-feet and modified to support these vehicles and connect the new buildings to the rest of the campus. Driveway curb cuts on Lake Hill Road will remain as is, requiring no additional permits from the Saratoga County Highway Department.

Environmental Impacts

As required, a SEQR LEAF Part 1 was prepared to evaluate the potential for significant environmental impacts associated with the project, see Appendix A. An archaeologist conducted a Phase 1 Survey of the site and the New York State (NYS) Office of Parks, Recreation, and Historic Preservation (OPRHP) provided a Letter of No Effect to signify that the Project will not impact any archaeological and/or historic resources, listed in or eligible for, the New York State and National Registers of Historic Places. There will be approximately

1/2-acre of site clearing on the west side of the campus to support the development of the new maintenance building, covered parking area, and stormwater and septic areas. The campus driveway modification will also partially fall within this cleared area. A letter was obtained from the New York Natural Resource Heritage stating that there are no records of rare or state-listed animals or plants, or significant natural communities at the project site or in its immediate vicinity. These determinations have been provided with Appendix A. There are no wetlands within the Project area, nor is the site within a FEMA designated floodplain.

Because the site falls within the Saratoga County Agriculture District #2 and the Project parcel is actively farmed, an Agricultural Data Statement was prepared for the project, see Appendix C. The abutters list included was compiled using data from the Saratoga County Parcel Viewer.

Thank you for your consideration of this submission. We respectfully request to be placed on the agenda for the July 17, 2023 Planning Board meeting for review. If you have any questions or require additional information about this application, please do not hesitate to contact me at bnelson@tighebond.com or 845-516-5803.

Very truly yours,

T&B Engineering and Landscape Architecture, P.C.

Brandee Nelson, PE, LEED AP
Vice President

Christopher Rokos, PE
Senior Engineer

Enclosures

Appendix A: State Environmental Quality Review (SEQR) Full Environmental Assessment Form (FEAF) Part 1 with Supplementary Information
Appendix B: Preliminary Plan Set, dated June 2023
Appendix C: Agricultural Data Statement

Copy: Alex Capo, Charlton School
Peter Urban, Balzer & Tuck Architecture

J:\C\C5112 The Charlton School\Permitting\Town of Charlton\July PB Meeting Submission_06 30 23\Charlton SPR Submission Letter.docx

APPENDIX A

Instructions for Completing Part 1

Part 1 is to be completed by the applicant or project sponsor. Responses become part of the application for approval or funding, are subject to public review, and may be subject to further verification.

Complete Part 1 based on information currently available. If additional research or investigation would be needed to fully respond to any item, please answer as thoroughly as possible based on current information; indicate whether missing information does not exist, or is not reasonably available to the sponsor; and, when possible, generally describe work or studies which would be necessary to update or fully develop that information.

Applicants/sponsors must complete all items in Sections A & B. In Sections C, D & E, most items contain an initial question that must be answered either "Yes" or "No". If the answer to the initial question is "Yes", complete the sub-questions that follow. If the answer to the initial question is "No", proceed to the next question. Section F allows the project sponsor to identify and attach any additional information. Section G requires the name and signature of the applicant or project sponsor to verify that the information contained in Part 1is accurate and complete.

A. Project and Applicant/Sponsor Information.

Name of Action or Project: Charlton School – Phase 1A Improvements		
Project Location (describe, and attach a general location map): 322 Lake Hill Rd, Burnt Hills, NY 12027		
Brief Description of Proposed Action (include purpose or need): A Campus Master Plan was created to evaluate the future of the Charlton School Campus. The School is located in the Town of Charlton, Saratoga County specifically parcel ID 256.-1-38, and encompasses approximately 20-acres of the site. The master plan reviewed the site's infrastructure and any building improvements needed. The project is in Phase 1A. This phase's proposed improvements will include the construction of four new dorms, a maintenance garage, and a reconfigured roadway for access; provide new parking and pedestrian walkways; demolition of Clemens Cottage, one maintenance building, and a shed; installation of related infrastructure upgrades to serve the new building and facilitate future expansion; reconfiguration of the paddock space; and the implementation of four (4) stormwater management areas. The site is located in the Saratoga Co Agricultural District #2. The campus is in a rural location but is served by municipal water from the Charlton Water District #1. Wastewater facilities consist of on-site septic systems. The site is located within the Town of Charlton MS4. National Grid provides electric and natural gas to the campus.		
Name of Applicant/Sponsor: The Charlton School Attn: Alex Capo	Telephone: (518) 399-8182 E-Mail: acapo@charltonschool.org	
Address: PO Box 47		
City/PO: Burnt Hills	State: NY	Zip Code: 12027
Project Contact (if not same as sponsor; give name and title/role): Brandee Nelson, PE, LEED AP, Tighe & Bond (project consultant)	Telephone: (845) 516-5803 E-Mail: bnelson@tighebond.com	
Address: 47 W Market St, Ste 2		
City/PO: Rhinebeck	State: NY	Zip Code: 12572
Property Owner (if not same as sponsor):	Telephone: E-Mail:	
Address:		
City/PO:	State:	Zip Code:

B. Government Approvals

B. Government Approvals, Funding, or Sponsorship. ("Funding" includes grants, loans, tax relief, and any other forms of financial assistance.)

Government Entity	If Yes: Identify Agency and Approval(s) Required	Application Date (Actual or projected)
a. City Counsel, Town Board, or Village Board of Trustees ☐Yes ☑No		
b. City, Town or Village Planning Board or Commission ☑Yes ☐No	Site Plan Review	September 2023
c. City, Town or Village Zoning Board of Appeals ☐Yes ☑No		
d. Other local agencies ☑Yes ☐No	Charlton Water District	
e. County agencies ☑Yes ☐No	Saratoga County 239-m Review, Highway & Driveway permits	Winter 2023-Spring 2024
f. Regional agencies ☐Yes ☑No		
g. State agencies ☑Yes ☐No	SPDES PCI&GP, DOH On-site WW approval, DOH-347, DOH-348, OPRHP, DASNY (funding)	Winter 2023-Spring 2024
h. Federal agencies ☐Yes ☑No		

i. Coastal Resources.

i. Is the project site within a Coastal Area, or the waterfront area of a Designated Inland Waterway? ☐Yes ☑No

ii. Is the project site located in a community with an approved Local Waterfront Revitalization Program? ☐Yes ☑No

iii. Is the project site within a Coastal Erosion Hazard Area? ☐Yes ☑No

C. Planning and Zoning

C.1. Planning and zoning actions.

Will administrative or legislative adoption, or amendment of a plan, local law, ordinance, rule or regulation be the only approval(s) which must be granted to enable the proposed action to proceed? ☐Yes ☑No

- **If Yes,** complete sections C, F and G.
- **If No,** proceed to question C.2 and complete all remaining sections and questions in Part 1

C.2. Adopted land use plans.

a. Do any municipally- adopted (city, town, village or county) comprehensive land use plan(s) include the site where the proposed action would be located? ☑Yes ☐No

If Yes, does the comprehensive plan include specific recommendations for the site where the proposed action would be located? ☐Yes ☑No

b. Is the site of the proposed action within any local or regional special planning district (for example: Greenway; Brownfield Opportunity Area (BOA); designated State or Federal heritage area; watershed management plan; or other?) ☑Yes ☐No

If Yes, identify the plan(s):

NYS Heritage Areas:Mohawk Valley Heritage Corridor

c. Is the proposed action located wholly or partially within an area listed in an adopted municipal open space plan, or an adopted municipal farmland protection plan? ☑Yes ☐No

If Yes, identify the plan(s):

Yes, the site is mentioned in the Town of Charlton's Farmland Protection Plan (2010). The site is partially located within what is designated as the "Dairy and Support Land".

C.3. Zoning

a. Is the site of the proposed action located in a municipality with an adopted zoning law or ordinance. ☑ Yes ☐ No
If Yes, what is the zoning classification(s) including any applicable overlay district?
Residential Agriculture (RA)

b. Is the use permitted or allowed by a special or conditional use permit? ☑ Yes ☐ No

c. Is a zoning change requested as part of the proposed action? ☐ Yes ☑ No
If Yes,
i. What is the proposed new zoning for the site? _____

C.4. Existing community services.

a. In what school district is the project site located? Burnt Hills - Ballston Lake Central School District

b. What police or other public protection forces serve the project site?
Town of Charlton Police & Constables Department

c. Which fire protection and emergency medical services serve the project site?
Charlton Volunteer Fire Department

d. What parks serve the project site?
Little Troy Park (0.9 miles), Jenkins Park (2.5 miles), Indian Meadows Park (3.4 miles)

D. Project Details

D.1. Proposed and Potential Development

a. What is the general nature of the proposed action (e.g., residential, industrial, commercial, recreational; if mixed, include all components)? School campus (educational)

b. a. Total acreage of the site of the proposed action? 267.12 acres
b. Total acreage to be physically disturbed? 4.20 acres
c. Total acreage (project site and any contiguous properties) owned or controlled by the applicant or project sponsor? 267.12 acres

c. Is the proposed action an expansion of an existing project or use? ☑ Yes ☐ No
i. If Yes, what is the approximate percentage of the proposed expansion and identify the units (e.g., acres, miles, housing units, square feet)? % 0.28 Units: acres

d. Is the proposed action a subdivision, or does it include a subdivision? ☐ Yes ☑ No
If Yes,
i. Purpose or type of subdivision? (e.g., residential, industrial, commercial; if mixed, specify types)
_____
ii. Is a cluster/conservation layout proposed? ☐ Yes ☐ No
iii. Number of lots proposed? _____
iv. Minimum and maximum proposed lot sizes? Minimum _____ Maximum _____

e. Will the proposed action be constructed in multiple phases? ☐ Yes ☑ No
i. If No, anticipated period of construction: 12 months
ii. If Yes:
- Total number of phases anticipated _____
- Anticipated commencement date of phase 1 (including demolition) _____ month _____ year
- Anticipated completion date of final phase _____ month _____year
- Generally describe connections or relationships among phases, including any contingencies where progress of one phase may determine timing or duration of future phases: _____

f. Does the project include new residential uses? ☐Yes ☑No
If Yes, show numbers of units proposed.

	One Family	Two Family	Three Family	Multiple Family (four or more)
Initial Phase	_____	_____	_____	_____
At completion of all phases	_____	_____	_____	_____

g. Does the proposed action include new non-residential construction (including expansions)? ☑Yes ☐No
If Yes,
i. Total number of structures 5
ii. Dimensions (in feet) of largest proposed structure: 28 height; 92 width; and 82 length
iii. Approximate extent of building space to be heated or cooled: 22,282 square feet

h. Does the proposed action include construction or other activities that will result in the impoundment of any liquids, such as creation of a water supply, reservoir, pond, lake, waste lagoon or other storage? ☐Yes ☑No
If Yes,
i. Purpose of the impoundment: _____
ii. If a water impoundment, the principal source of the water: ☐ Ground water ☐ Surface water streams ☐Other specify:
_____
iii. If other than water, identify the type of impounded/contained liquids and their source.
_____
iv. Approximate size of the proposed impoundment. Volume: _____ million gallons; surface area: _____ acres
v. Dimensions of the proposed dam or impounding structure: _____ height; _____ length
vi. Construction method/materials for the proposed dam or impounding structure (e.g., earth fill, rock, wood, concrete):
_____

D.2. Project Operations

a. Does the proposed action include any excavation, mining, or dredging, during construction, operations, or both? ☐Yes ☑No
(Not including general site preparation, grading or installation of utilities or foundations where all excavated materials will remain onsite)
If Yes:
i .What is the purpose of the excavation or dredging? _____
ii. How much material (including rock, earth, sediments, etc.) is proposed to be removed from the site?
- Volume (specify tons or cubic yards): _____
- Over what duration of time? _____

iii. Describe nature and characteristics of materials to be excavated or dredged, and plans to use, manage or dispose of them.
_____
_____
iv. Will there be onsite dewatering or processing of excavated materials? ☐Yes ☐No
If yes, describe. _____
_____
v. What is the total area to be dredged or excavated? _____acres
vi. What is the maximum area to be worked at any one time? _____ acres
vii. What would be the maximum depth of excavation or dredging? _____ feet
viii. Will the excavation require blasting? ☐Yes ☐No
ix. Summarize site reclamation goals and plan: _____
_____
_____

b. Would the proposed action cause or result in alteration of, increase or decrease in size of, or encroachment into any existing wetland, waterbody, shoreline, beach or adjacent area? ☐Yes ☑No
If Yes:
i. Identify the wetland or waterbody which would be affected (by name, water index number, wetland map number or geographic description): _____
_____

ii. Describe how the proposed action would affect that waterbody or wetland, e.g. excavation, fill, placement of structures, or alteration of channels, banks and shorelines. Indicate extent of activities, alterations and additions in square feet or acres: _____

iii. Will the proposed action cause or result in disturbance to bottom sediments? ☐ Yes ☑ No
If Yes, describe: _____

iv. Will the proposed action cause or result in the destruction or removal of aquatic vegetation? ☐ Yes ☑ No
If Yes:

- acres of aquatic vegetation proposed to be removed: _____
- expected acreage of aquatic vegetation remaining after project completion: _____
- purpose of proposed removal (e.g. beach clearing, invasive species control, boat access): _____
- proposed method of plant removal: _____
- if chemical/herbicide treatment will be used, specify product(s): _____

v. Describe any proposed reclamation/mitigation following disturbance: _____
N/A

c. Will the proposed action use, or create a new demand for water? ☑ Yes ☐ No
If Yes:

i. Total anticipated water usage/demand per day: 3,050 gallons/day

ii. Will the proposed action obtain water from an existing public water supply? ☑ Yes ☐ No
If Yes:

- Name of district or service area: Charlton water district
- Does the existing public water supply have capacity to serve the proposal? ☑ Yes ☐ No
- Is the project site in the existing district? ☑ Yes ☐ No
- Is expansion of the district needed? ☐ Yes ☑ No
- Do existing lines serve the project site? ☑ Yes ☐ No

iii. Will line extension within an existing district be necessary to supply the project? ☐ Yes ☑ No
If Yes:

- Describe extensions or capacity expansions proposed to serve this project: _____
- Source(s) of supply for the district: _____

iv. Is a new water supply district or service area proposed to be formed to serve the project site? ☐ Yes ☑ No
If, Yes:

- Applicant/sponsor for new district: _____
- Date application submitted or anticipated: _____
- Proposed source(s) of supply for new district: _____

v. If a public water supply will not be used, describe plans to provide water supply for the project: _____
N/A

vi. If water supply will be from wells (public or private), what is the maximum pumping capacity: N/A gallons/minute.

d. Will the proposed action generate liquid wastes? ☑ Yes ☐ No
If Yes:

i. Total anticipated liquid waste generation per day: 3,050 gallons/day

ii. Nature of liquid wastes to be generated (e.g., sanitary wastewater, industrial; if combination, describe all components and approximate volumes or proportions of each): _____
Wastewater from the dormitory buildings and maintenance garage.

iii. Will the proposed action use any existing public wastewater treatment facilities? ☐ Yes ☑ No
If Yes:

- Name of wastewater treatment plant to be used: _____
- Name of district: _____
- Does the existing wastewater treatment plant have capacity to serve the project? ☐ Yes ☐ No
- Is the project site in the existing district? ☐ Yes ☐ No
- Is expansion of the district needed? ☐ Yes ☐ No

- Do existing sewer lines serve the project site? ☐Yes ☐No
- Will a line extension within an existing district be necessary to serve the project? ☐Yes ☐No

  If Yes:
  - Describe extensions or capacity expansions proposed to serve this project: _____

iv. Will a new wastewater (sewage) treatment district be formed to serve the project site? ☐Yes ☑No

If Yes:
- Applicant/sponsor for new district: _____
- Date application submitted or anticipated: _____
- What is the receiving water for the wastewater discharge? _____

v. If public facilities will not be used, describe plans to provide wastewater treatment for the project, including specifying proposed receiving water (name and classification if surface discharge or describe subsurface disposal plans):

The wastewater from the dormitory buildings and maintenance garage will be treated with septic systems that will discharge wastewater into the ground.

vi. Describe any plans or designs to capture, recycle or reuse liquid waste: _____

N/A

e. Will the proposed action disturb more than one acre and create stormwater runoff, either from new point sources (i.e. ditches, pipes, swales, curbs, gutters or other concentrated flows of stormwater) or non-point source (i.e. sheet flow) during construction or post construction? ☑Yes ☐No

If Yes:

i. How much impervious surface will the project create in relation to total size of project parcel?

32,935 Square feet or 0.76 acres (impervious surface) This includes all new impervious surfaces

_____ Square feet or 267.1 acres (parcel size)

ii. Describe types of new point sources. _____

iii. Where will the stormwater runoff be directed (i.e. on-site stormwater management facility/structures, adjacent properties, groundwater, on-site surface water or off-site surface waters)?

Multiple stormwater rain gardens and/or infiltration basins will constructed to mitigate, treat, and recharge the stormwater runoff from the project site.

- If to surface waters, identify receiving water bodies or wetlands: _____
- Will stormwater runoff flow to adjacent properties? ☐Yes ☑No

iv. Does the proposed plan minimize impervious surfaces, use pervious materials or collect and re-use stormwater? ☑Yes ☐No

f. Does the proposed action include, or will it use on-site, one or more sources of air emissions, including fuel combustion, waste incineration, or other processes or operations? ☐Yes ☑No

If Yes, identify:

i. Mobile sources during project operations (e.g., heavy equipment, fleet or delivery vehicles)

ii. Stationary sources during construction (e.g., power generation, structural heating, batch plant, crushers)

iii. Stationary sources during operations (e.g., process emissions, large boilers, electric generation)

g. Will any air emission sources named in D.2.f (above), require a NY State Air Registration, Air Facility Permit, or Federal Clean Air Act Title IV or Title V Permit? ☐Yes ☑No

If Yes:

i. Is the project site located in an Air quality non-attainment area? (Area routinely or periodically fails to meet ambient air quality standards for all or some parts of the year) ☐Yes ☐No

ii. In addition to emissions as calculated in the application, the project will generate:
- _____Tons/year (short tons) of Carbon Dioxide (CO_2)
- _____Tons/year (short tons) of Nitrous Oxide (N_2O)
- _____Tons/year (short tons) of Perfluorocarbons (PFCs)
- _____Tons/year (short tons) of Sulfur Hexafluoride (SF_6)
- _____Tons/year (short tons) of Carbon Dioxide equivalent of Hydroflourocarbons (HFCs)
- _____Tons/year (short tons) of Hazardous Air Pollutants (HAPs)

h. Will the proposed action generate or emit methane (including, but not limited to, sewage treatment plants, landfills, composting facilities)? ☐Yes ☑No

If Yes:

i. Estimate methane generation in tons/year (metric): _____

ii. Describe any methane capture, control or elimination measures included in project design (e.g., combustion to generate heat or electricity, flaring): _____

i. Will the proposed action result in the release of air pollutants from open-air operations or processes, such as quarry or landfill operations? ☐Yes ☑No

If Yes: Describe operations and nature of emissions (e.g., diesel exhaust, rock particulates/dust):

_____

j. Will the proposed action result in a substantial increase in traffic above present levels or generate substantial new demand for transportation facilities or services? ☐Yes ☑No

If Yes:

i. When is the peak traffic expected (Check all that apply): ☐ Morning ☐ Evening ☐Weekend ☐ Randomly between hours of _____ to _____.

ii. For commercial activities only, projected number of truck trips/day and type (e.g., semi trailers and dump trucks): _____

iii. Parking spaces: Existing _____ Proposed _____ Net increase/decrease _____

iv. Does the proposed action include any shared use parking? ☐Yes ☐No

v. If the proposed action includes any modification of existing roads, creation of new roads or change in existing access, describe:

vi. Are public/private transportation service(s) or facilities available within ½ mile of the proposed site? ☐Yes ☐No

vii Will the proposed action include access to public transportation or accommodations for use of hybrid, electric or other alternative fueled vehicles? ☐Yes ☐No

viii. Will the proposed action include plans for pedestrian or bicycle accommodations for connections to existing pedestrian or bicycle routes? ☐Yes ☐No

k. Will the proposed action (for commercial or industrial projects only) generate new or additional demand for energy? ☐Yes ☑No

If Yes:

i. Estimate annual electricity demand during operation of the proposed action: _____

ii. Anticipated sources/suppliers of electricity for the project (e.g., on-site combustion, on-site renewable, via grid/local utility, or other):

iii. Will the proposed action require a new, or an upgrade, to an existing substation? ☐Yes ☐No

l. Hours of operation. Answer all items which apply.

i. During Construction:

- Monday - Friday: 7am to 7pm
- Saturday: N/A
- Sunday: N/A
- Holidays: N/A

ii. During Operations:

- Monday - Friday: 24/7
- Saturday: 24/7
- Sunday: 24/7
- Holidays: 24/7

m. Will the proposed action produce noise that will exceed existing ambient noise levels during construction, operation, or both? ☑ Yes ☐ No

If yes:

i. Provide details including sources, time of day and duration:

General construction noise which is anticipated to take 12 months, between the hours of 7am to 7pm only during business days (M-F).

ii. Will the proposed action remove existing natural barriers that could act as a noise barrier or screen? ☐ Yes ☑ No

Describe: _____

n. Will the proposed action have outdoor lighting? ☑ Yes ☐ No

If yes:

i. Describe source(s), location(s), height of fixture(s), direction/aim, and proximity to nearest occupied structures:

The site has existing exterior lighting. All proposed lighting will be Dark Sky compliant, downward facing fully shielded lights at egress doors.

ii. Will proposed action remove existing natural barriers that could act as a light barrier or screen? ☐ Yes ☑ No

Describe: _____

o. Does the proposed action have the potential to produce odors for more than one hour per day? ☐ Yes ☑ No

If Yes, describe possible sources, potential frequency and duration of odor emissions, and proximity to nearest occupied structures: _____

p. Will the proposed action include any bulk storage of petroleum (combined capacity of over 1,100 gallons) or chemical products 185 gallons in above ground storage or any amount in underground storage? ☐ Yes ☑ No

If Yes:

i. Product(s) to be stored _____

ii. Volume(s) _____ per unit time _____ (e.g., month, year)

iii. Generally, describe the proposed storage facilities: _____

q. Will the proposed action (commercial, industrial and recreational projects only) use pesticides (i.e., herbicides, insecticides) during construction or operation? ☐ Yes ☑ No

If Yes:

i. Describe proposed treatment(s):

_____

ii. Will the proposed action use Integrated Pest Management Practices? ☐ Yes ☐ No

r. Will the proposed action (commercial or industrial projects only) involve or require the management or disposal of solid waste (excluding hazardous materials)? ☐ Yes ☑ No

If Yes:

i. Describe any solid waste(s) to be generated during construction or operation of the facility:

- Construction: _____ tons per _____ (unit of time)
- Operation : _____ tons per _____ (unit of time)

ii. Describe any proposals for on-site minimization, recycling or reuse of materials to avoid disposal as solid waste:

- Construction: _____
- Operation: _____

iii. Proposed disposal methods/facilities for solid waste generated on-site:

- Construction: _____
- Operation: _____

s. Does the proposed action include construction or modification of a solid waste management facility? ☐ Yes ☑ No

If Yes:

i. Type of management or handling of waste proposed for the site (e.g., recycling or transfer station, composting, landfill, or other disposal activities): _____

ii. Anticipated rate of disposal/processing:

- _____ Tons/month, if transfer or other non-combustion/thermal treatment, or
- _____ Tons/hour, if combustion or thermal treatment

iii. If landfill, anticipated site life: _____ years

t. Will the proposed action at the site involve the commercial generation, treatment, storage, or disposal of hazardous waste? ☐ Yes ☑ No

If Yes:

i. Name(s) of all hazardous wastes or constituents to be generated, handled or managed at facility: _____

ii. Generally describe processes or activities involving hazardous wastes or constituents: _____

iii. Specify amount to be handled or generated _____ tons/month

iv. Describe any proposals for on-site minimization, recycling or reuse of hazardous constituents: _____

v. Will any hazardous wastes be disposed at an existing offsite hazardous waste facility? ☐ Yes ☐ No

If Yes: provide name and location of facility: _____

If No: describe proposed management of any hazardous wastes which will not be sent to a hazardous waste facility: _____

E. Site and Setting of Proposed Action

E.1. Land uses on and surrounding the project site

a. Existing land uses.

i. Check all uses that occur on, adjoining and near the project site.

☐ Urban ☐ Industrial ☐ Commercial ☐ Residential (suburban) ☑ Rural (non-farm)

☐ Forest ☐ Agriculture ☐ Aquatic ☑ Other (specify): Institutional

ii. If mix of uses, generally describe:

The Charlton School Campus is within the Saratoga Co Ag District #2. The school includes a classroom building, dormitories, chapel, maintenance buildings and administration buildings. The school also has an equine therapy program which includes a horse barn and multiple horse paddocks.

b. Land uses and covertypes on the project site.

Land use or Covertype	Current Acreage	Acreage After Project Completion	Change (Acres +/-)
• Roads, buildings, and other paved or impervious surfaces	4.17	4.92	+ 0.76
• Forested	114.73	114.31	- 0.42
• Meadows, grasslands or brushlands (non-agricultural, including abandoned agricultural)	37.54	37.20	- 0.34
• Agricultural (includes active orchards, field, greenhouse etc.)	65.77	65.77	0
• Surface water features (lakes, ponds, streams, rivers, etc.)	5.11	5.11	0
• Wetlands (freshwater or tidal)	39.80	39.80	0
• Non-vegetated (bare rock, earth or fill)	0	0	0
• Other Describe: _____			

c. Is the project site presently used by members of the community for public recreation? ☐ Yes ☑ No

i. If Yes: explain: _____

d. Are there any facilities serving children, the elderly, people with disabilities (e.g., schools, hospitals, licensed day care centers, or group homes) within 1500 feet of the project site? ☐ Yes ☑ No

If Yes,

i. Identify Facilities:

_____

_____

e. Does the project site contain an existing dam? ☐ Yes ☑ No

If Yes:

i. Dimensions of the dam and impoundment:

- Dam height: _____ feet
- Dam length: _____ feet
- Surface area: _____ acres
- Volume impounded: _____ gallons OR acre-feet

ii. Dam's existing hazard classification: _____

iii. Provide date and summarize results of last inspection:

_____

_____

f. Has the project site ever been used as a municipal, commercial or industrial solid waste management facility, or does the project site adjoin property which is now, or was at one time, used as a solid waste management facility? ☐ Yes ☑ No

If Yes:

i. Has the facility been formally closed? ☐ Yes ☐ No

- If yes, cite sources/documentation: _____

ii. Describe the location of the project site relative to the boundaries of the solid waste management facility:

_____

_____

iii. Describe any development constraints due to the prior solid waste activities: _____

_____

g. Have hazardous wastes been generated, treated and/or disposed of at the site, or does the project site adjoin property which is now or was at one time used to commercially treat, store and/or dispose of hazardous waste? ☐ Yes ☑ No

If Yes:

i. Describe waste(s) handled and waste management activities, including approximate time when activities occurred:

_____

_____

h. Potential contamination history. Has there been a reported spill at the proposed project site, or have any remedial actions been conducted at or adjacent to the proposed site? ☐ Yes ☑ No

If Yes:

i. Is any portion of the site listed on the NYSDEC Spills Incidents database or Environmental Site Remediation database? Check all that apply: ☐ Yes ☐ No

☐ Yes – Spills Incidents database Provide DEC ID number(s): _____

☐ Yes – Environmental Site Remediation database Provide DEC ID number(s): _____

☐ Neither database

ii. If site has been subject of RCRA corrective activities, describe control measures: _____

_____

_____

iii. Is the project within 2000 feet of any site in the NYSDEC Environmental Site Remediation database? ☐ Yes ☑ No

If yes, provide DEC ID number(s): _____

iv. If yes to (i), (ii) or (iii) above, describe current status of site(s):

_____

_____

v. Is the project site subject to an institutional control limiting property uses? ☐ Yes ☑ No

- If yes, DEC site ID number: _____
- Describe the type of institutional control (e.g., deed restriction or easement): _____
- Describe any use limitations: _____
- Describe any engineering controls: _____
- Will the project affect the institutional or engineering controls in place? ☐ Yes ☐ No
- Explain: _____

E.2. Natural Resources On or Near Project Site

a. What is the average depth to bedrock on the project site? more than 6.6 feet

b. Are there bedrock outcroppings on the project site? ☐ Yes ☑ No
If Yes, what proportion of the site is comprised of bedrock outcroppings? _____%

c. Predominant soil type(s) present on project site:

Chenango silt loam	78.5 %
Windsor loamy sands	21.5 %
	%

d. What is the average depth to the water table on the project site? Average: 6.6 feet

e. Drainage status of project site soils:
- ☑ Well Drained: 100 % of site
- ☐ Moderately Well Drained: _____% of site
- ☐ Poorly Drained _____% of site

f. Approximate proportion of proposed action site with slopes:
- ☑ 0-10%: 100 % of site
- ☐ 10-15%: _____% of site
- ☐ 15% or greater: _____% of site

g. Are there any unique geologic features on the project site? ☐ Yes ☑ No
If Yes, describe: _____

h. Surface water features.

i. Does any portion of the project site contain wetlands or other waterbodies (including streams, rivers, ponds or lakes)? ☐ Yes ☑ No

ii. Do any wetlands or other waterbodies adjoin the project site? ☑ Yes ☐ No

If Yes to either *i* or *ii*, continue. If No, skip to E.2.i.

iii. Are any of the wetlands or waterbodies within or adjoining the project site regulated by any federal, state or local agency? ☑ Yes ☐ No

iv. For each identified regulated wetland and waterbody on the project site, provide the following information:

- Streams: Name _____ Classification _____
- Lakes or Ponds: Name _____ Classification _____
- Wetlands: Name _____ Approximate Size _____
- Wetland No. (if regulated by DEC) B-44, B-42

v. Are any of the above water bodies listed in the most recent compilation of NYS water quality-impaired waterbodies? ☐ Yes ☑ No

If yes, name of impaired water body/bodies and basis for listing as impaired: _____

i. Is the project site in a designated Floodway? ☐ Yes ☑ No

j. Is the project site in the 100-year Floodplain? ☐ Yes ☑ No

k. Is the project site in the 500-year Floodplain? ☐ Yes ☑ No

l. Is the project site located over, or immediately adjoining, a primary, principal or sole source aquifer? ☑ Yes ☐ No
If Yes:

i. Name of aquifer: Principal Aquifer, Sole Source Aquifer Names:Schenectady-Niskayuna SSA

m. Identify the predominant wildlife species that occupy or use the project site: _____

Squirrel _____ Variety Birds _____ _____

Deer _____ _____ _____

Chipmunk

n. Does the project site contain a designated significant natural community? ☐ Yes ☑ No

If Yes:

i. Describe the habitat/community (composition, function, and basis for designation): _____

ii. Source(s) of description or evaluation: _____

iii. Extent of community/habitat:

- Currently: _____ acres
- Following completion of project as proposed: _____ acres
- Gain or loss (indicate + or -): _____ acres

o. Does project site contain any species of plant or animal that is listed by the federal government or NYS as endangered or threatened, or does it contain any areas identified as habitat for an endangered or threatened species? ☐ Yes ☑ No

If Yes:

i. Species and listing (endangered or threatened): _____

p. Does the project site contain any species of plant or animal that is listed by NYS as rare, or as a species of special concern? ☐ Yes ☑ No

If Yes:

i. Species and listing: _____

q. Is the project site or adjoining area currently used for hunting, trapping, fishing or shell fishing? ☐ Yes ☑ No

If yes, give a brief description of how the proposed action may affect that use: _____

E.3. Designated Public Resources On or Near Project Site

a. Is the project site, or any portion of it, located in a designated agricultural district certified pursuant to Agriculture and Markets Law, Article 25-AA, Section 303 and 304? ☑ Yes ☐ No

If Yes, provide county plus district name/number: SARA002

b. Are agricultural lands consisting of highly productive soils present? ☑ Yes ☐ No

i. If Yes: acreage(s) on project site? 100% (Prime Farmland 78.5% & Farmland of Statewide Importance (21.5%)

ii. Source(s) of soil rating(s): Web Soil Survey

c. Does the project site contain all or part of, or is it substantially contiguous to, a registered National Natural Landmark? ☐ Yes ☑ No

If Yes:

i. Nature of the natural landmark: ☐ Biological Community ☐ Geological Feature

ii. Provide brief description of landmark, including values behind designation and approximate size/extent: _____

d. Is the project site located in or does it adjoin a state listed Critical Environmental Area? ☐ Yes ☑ No

If Yes:

i. CEA name: _____

ii. Basis for designation: _____

iii. Designating agency and date: _____

e. Does the project site contain, or is it substantially contiguous to, a building, archaeological site, or district which is listed on the National or State Register of Historic Places, or that has been determined by the Commissioner of the NYS Office of Parks, Recreation and Historic Preservation to be eligible for listing on the State Register of Historic Places? ☐ Yes ☑ No

If Yes:

i. Nature of historic/archaeological resource: ☐ Archaeological Site ☐ Historic Building or District

ii. Name: _____

iii. Brief description of attributes on which listing is based:

_____

f. Is the project site, or any portion of it, located in or adjacent to an area designated as sensitive for archaeological sites on the NY State Historic Preservation Office (SHPO) archaeological site inventory? ☑ Yes ☐ No

g. Have additional archaeological or historic site(s) or resources been identified on the project site? ☐ Yes ☑ No

If Yes:

i. Describe possible resource(s): _____

ii. Basis for identification: _____

h. Is the project site within fives miles of any officially designated and publicly accessible federal, state, or local scenic or aesthetic resource? ☐ Yes ☑ No

If Yes:

i. Identify resource: _____

ii. Nature of, or basis for, designation (e.g., established highway overlook, state or local park, state historic trail or scenic byway, etc.): _____

iii. Distance between project and resource: _____ miles.

i. Is the project site located within a designated river corridor under the Wild, Scenic and Recreational Rivers Program 6 NYCRR 666? ☐ Yes ☑ No

If Yes:

i. Identify the name of the river and its designation: _____

ii. Is the activity consistent with development restrictions contained in 6NYCRR Part 666? ☐ Yes ☐ No

F. Additional Information

Attach any additional information which may be needed to clarify your project.

If you have identified any adverse impacts which could be associated with your proposal, please describe those impacts plus any measures which you propose to avoid or minimize them.

G. Verification

I certify that the information provided is true to the best of my knowledge.

Applicant/Sponsor Name Brandee Nelson Date 06/30/2023

Signature _____ Title Vice President

PRINT FORM

EAF Mapper Summary Report

Tuesday, June 20, 2023 5:44 PM

Disclaimer: The EAF Mapper is a screening tool intended to assist project sponsors and reviewing agencies in preparing an environmental assessment form (EAF). Not all questions asked in the EAF are answered by the EAF Mapper. Additional information on any EAF question can be obtained by consulting the EAF Workbooks. Although the EAF Mapper provides the most up-to-date digital data available to DEC, you may also need to contact local or other data sources in order to obtain data not provided by the Mapper. Digital data is not a substitute for agency determinations.

B.i.i [Coastal or Waterfront Area]	No
B.i.ii [Local Waterfront Revitalization Area]	No
C.2.b. [Special Planning District]	Yes - Digital mapping data are not available for all Special Planning Districts. Refer to EAF Workbook.
C.2.b. [Special Planning District - Name]	NYS Heritage Areas:Mohawk Valley Heritage Corridor
E.1.h [DEC Spills or Remediation Site - Potential Contamination History]	Digital mapping data are not available or are incomplete. Refer to EAF Workbook.
E.1.h.i [DEC Spills or Remediation Site - Listed]	Digital mapping data are not available or are incomplete. Refer to EAF Workbook.
E.1.h.i [DEC Spills or Remediation Site - Environmental Site Remediation Database]	Digital mapping data are not available or are incomplete. Refer to EAF Workbook.
E.1.h.iii [Within 2,000' of DEC Remediation Site]	No
E.2.g [Unique Geologic Features]	No
E.2.h.i [Surface Water Features]	No
E.2.h.ii [Surface Water Features]	Yes
E.2.h.iii [Surface Water Features]	Yes - Digital mapping information on local and federal wetlands and waterbodies is known to be incomplete. Refer to EAF Workbook.
E.2.h.v [Impaired Water Bodies]	No
E.2.i. [Floodway]	Digital mapping data are not available or are incomplete. Refer to EAF Workbook.
E.2.j. [100 Year Floodplain]	Digital mapping data are not available or are incomplete. Refer to EAF Workbook.
E.2.k. [500 Year Floodplain]	Digital mapping data are not available or are incomplete. Refer to EAF Workbook.
E.2.l. [Aquifers]	Yes
E.2.l. [Aquifer Names]	Principal Aquifer, Sole Source Aquifer Names:Schenectady-Niskayuna SSA

E.2.n. [Natural Communities]	No
E.2.o. [Endangered or Threatened Species]	No
E.2.p. [Rare Plants or Animals]	No
E.3.a. [Agricultural District]	Yes
E.3.a. [Agricultural District]	SARA002
E.3.c. [National Natural Landmark]	No
E.3.d [Critical Environmental Area]	No
E.3.e. [National or State Register of Historic Places or State Eligible Sites]	Digital mapping data are not available or are incomplete. Refer to EAF Workbook.
E.3.f. [Archeological Sites]	Yes
E.3.i. [Designated River Corridor]	No

Location Map

U.S. DEPARTMENT OF THE INTERIOR
U.S. GEOLOGICAL SURVEY

The National Map
US Topo

BURNT HILLS QUADRANGLE
NEW YORK
7.5-MINUTE SERIES

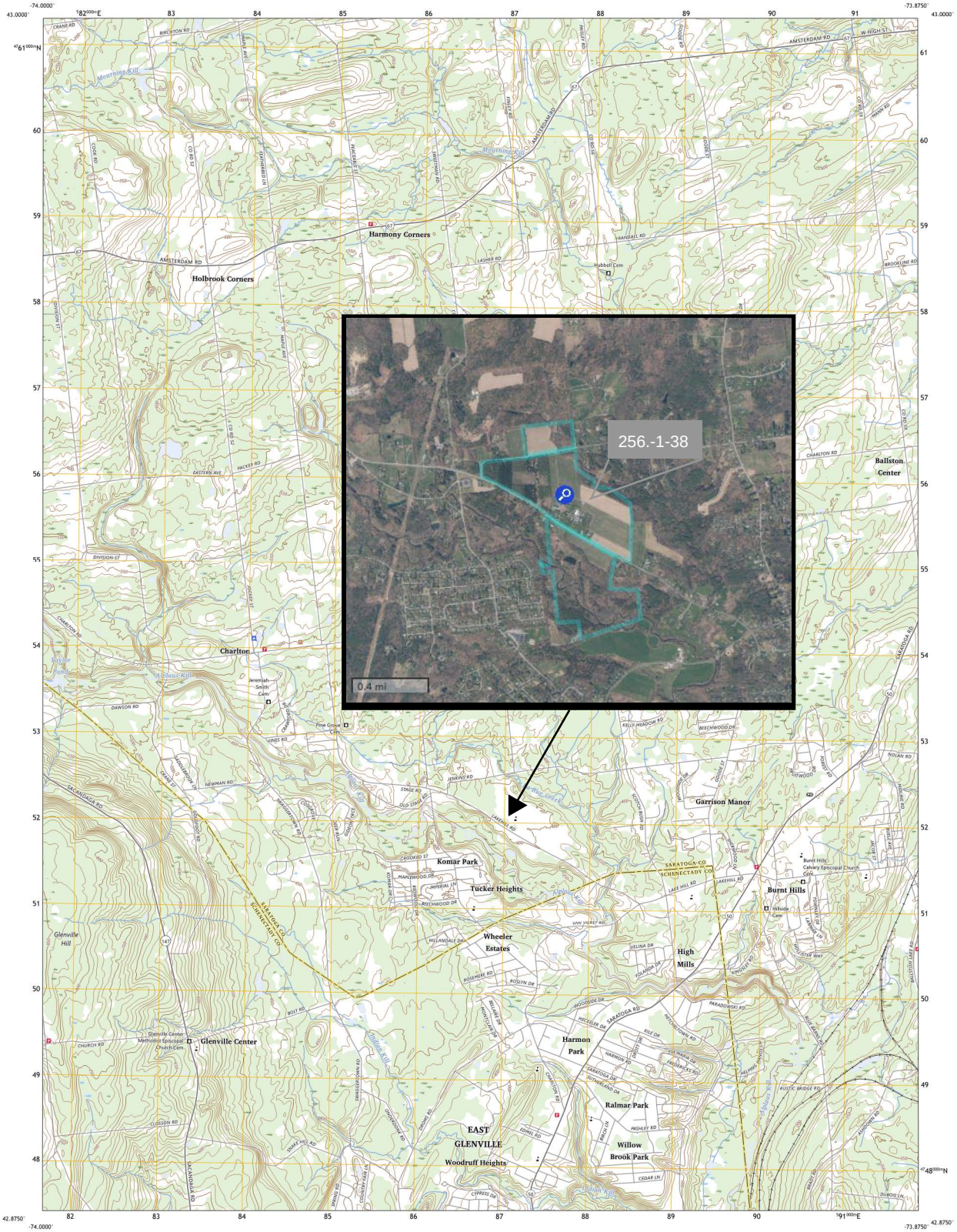

Produced by the United States Geological Survey
North American Datum of 1983 (NAD83)
World Geodetic System of 1984 (WGS84). Projection and 1 000-meter grid:Universal Transverse Mercator, Zone 18T
This map is not a legal document. Boundaries may be generalized for this map scale. Private lands within government reservations may not be shown. Obtain permission before entering private lands.

Imagery.....NAIP, September 2017 - December 2017
Roads.....U.S. Census Bureau, 2016
Names.....GNIS, 1980 - 2023
Hydrography.....National Hydrography Dataset, 2002 - 2021
Contours.....National Elevation Dataset, 2014
Boundaries.....Multiple sources; see metadata file 2021 - 2022

Wetlands.....FWS National Wetlands Inventory 1986 - 1986

MN 13°7' 233 MILS
GN 0°43' 13 MILS
UTM GRID AND 2023 MAGNETIC NORTH DECLINATION AT CENTER OF SHEET

U.S. National Grid
100,000 - m Square ID
WN
Grid Zone Designation 18T

SCALE 1:24 000
KILOMETERS 1 0.5 0 1 2
METERS 1000 500 0 1000 2000
MILES 1 0.5 0 1
FEET 1000 0 1000 2000 3000 4000 5000 6000 7000 8000 9000 10000

CONTOUR INTERVAL 10 FEET
NORTH AMERICAN VERTICAL DATUM OF 1988

This map was produced to conform with the National Geospatial Program US Topo Product Standard.

NEW YORK
QUADRANGLE LOCATION

1	2	3
4		5
6	7	8

ADJOINING QUADRANGLES
1 Galway
2 Middle Grove
3 Saratoga Springs
4 Pattersonville
5 Round Lake
6 Rotterdam Junction
7 Schenectady
8 Niskayuna

ROAD CLASSIFICATION
Expressway
Secondary Hwy
Ramp
Local Connector
Local Road
4WD
Interstate Route
US Route
State Route

BURNT HILLS, NY
2023

NSN
NGA REF NO. 1 3 0 1 5 0 2 4 6 0 4 7

NY Natural Resource Heritage

No Impact Letter

NEW YORK STATE DEPARTMENT OF ENVIRONMENTAL CONSERVATION

Division of Fish and Wildlife, New York Natural Heritage Program
625 Broadway, Fifth Floor, Albany, NY 12233-4757
P: (518) 402-8935 | F: (518) 402-8925
www.dec.ny.gov

June 19, 2023

Arica McCarthy
Tighe & Bond
47 W Market Street, Ste 2
Rhinebeck, NY 12572

Re: Charlton School -- 322 Lake Hill Road
County: Saratoga Town/City: Charlton

Dear Arica McCarthy:

In response to your recent request, we have reviewed the New York Natural Heritage Program database with respect to the above project.

We have no records of rare or state-listed animals or plants, or significant natural communities at the project site or in its immediate vicinity.

The absence of data does not necessarily mean that rare or state-listed species, significant natural communities, or other significant habitats do not exist on or adjacent to the proposed site. Rather, our files currently do not contain information that indicates their presence. For most sites, comprehensive field surveys have not been conducted. We cannot provide a definitive statement on the presence or absence of all rare or state-listed species or significant natural communities. Depending on the nature of the project and the conditions at the project site, further information from on-site surveys or other resources may be required to fully assess impacts on biological resources.

This response applies only to known occurrences of rare or state-listed animals and plants, significant natural communities, and other significant habitats maintained in the Natural Heritage database. Your project may require additional review or permits; for information regarding other permits that may be required under state law for regulated areas or activities (e.g., regulated wetlands), please contact the NYS DEC Region 5 Office, Division of Environmental Permits, at dep.r5@dec.ny.gov.

Sincerely,

Heidi Krahling
Environmental Review Specialist
New York Natural Heritage Program

NEW YORK STATE OF OPPORTUNITY | Department of Environmental Conservation

NYS OPRHP Letter of No Effect &
Phase 1 Archaeology Assessment

New York State
Parks, Recreation and
Historic Preservation

KATHY HOCHUL
Governor

ERIK KULLESEID
Commissioner

June 16, 2023

Arica McCarthy
Planner
Tighe & Bond
47 W Market Street
Ste 2
Rhinebeck, NY 12572

Re: DEC
Charlton School - Phase 1A Development
322 Lake Hill Rd, Burnt Hills, NY 12027
23PR04413

Dear Arica McCarthy:

Thank you for requesting the comments of the Division for Historic Preservation of the Office of Parks, Recreation and Historic Preservation (OPRHP). We have reviewed the submitted materials in accordance with the New York State Historic Preservation Act of 1980 (section 14.09 of the New York Parks, Recreation and Historic Preservation Law). These comments are those of the Division for Historic Preservation and relate only to Historic/Cultural resources. They do not include potential environmental impacts to New York State Parkland that may be involved in or near your project. Such impacts must be considered as part of the environmental review of the project pursuant to the State Environmental Quality Review Act (New York Environmental Conservation Law Article 8) and its implementing regulations (6NYCRR Part 617).

OPRHP has reviewed the Phase I Archaeological Survey Report prepared for this project (June 2023; 23SR00330). No archaeological sites were identified by the survey. Therefore, it is the opinion of the OPRHP that no properties, including archaeological and/or historic resources, listed in or eligible for the New York State and National Registers of Historic Places will be impacted by this project.

If you have any questions, I can be reached at Jessica.Schreyer@parks.ny.gov.

Sincerely,

Jessica E. Schreyer

Jessica Schreyer
Historic Preservation Program Analyst - Archaeologist

Tighe&Bond

APPENDIX B

TOWN OF CHARLTON, NY
THE CHARLTON SCHOOL
PHASE 1A IMPROVEMENTS

PRELIMINARY PLAN SET
JUNE 2023

LIST OF DRAWINGS		
SHEET NO.	DRAWING NO.	DRAWING TITLE
GENERAL		
1	G-001	COVER SHEET
2	G-002	GENERAL NOTES, LEGEND & ABBREVIATIONS
CIVIL / LANDSCAPE ARCHITECT		
3	C-100	EXISTING CONDITIONS PLAN
4	C-200	DEMOLITION PLAN
5	L100	PHASE 1A OVERALL LAYOUT & MATERIALS PLAN
6	L101	LAYOUT & MATERIALS PLAN ENLARGEMENT
7	C-300	SITE PLAN
8	C-400	UTILITY PLAN
9	C-501	SITE DETAILS - 1
10	C-502	SITE DETAILS - 2
11	C-503	SITE DETAILS - 3
ARCHITECT		
12	A201	STUDENT DORMITORY - EXTERIOR ELEVATIONS
13	A202	STUDENT DORMITORY - EXTERIOR ELEVATIONS
14	A203	MAINTENANCE BUILDING - EXTERIOR ELEVATIONS
15	A204	MAINTENANCE BUILDING - EXTERIOR ELEVATIONS

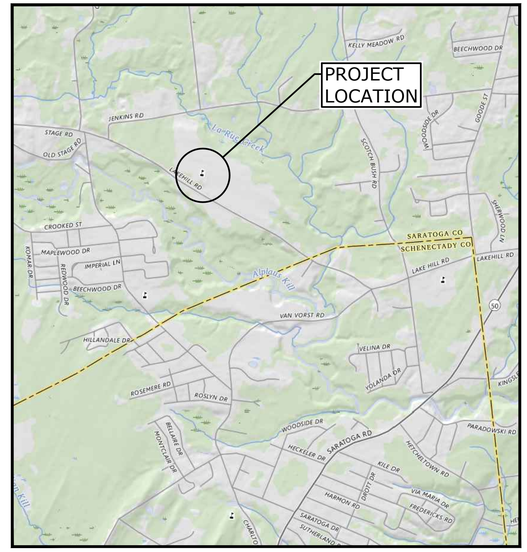

LOCATION MAP
SCALE: 1" = 2000'
SOURCE: 2023 U.S.G.S. 7.5-MINUTE TOPOGRAPHIC QUADRANGLE
BURNT HILLS, NY

PREPARED BY:
Tighe&Bond

PREPARED FOR:
THE CHARLTON SCHOOL
PO BOX 47
322 LAKE HILL ROAD
BURNT HILLS, NY 12027

THIS DOCUMENT IS INCOMPLETE AND IS RELEASED TEMPORARILY FOR PROGRESS REVIEW ONLY. IT IS NOT INTENDED FOR BIDDING OR CONSTRUCTION PURPOSES.

NOT FOR CONSTRUCTION
COMPLETE SET 15 SHEETS

Last Saved: 6/29/2023
Plotted On:Jun 29, 2023-3:10pm By: RLewis
Tighe & Bond:J:\C\C5112 The Charlton School\Drawings_Figures\AutoCAD\Sheet\C5112-001 COVER.dwg

SERVICES PROVIDED IN NEW YORK BY T&B ENGINEERING AND LANDSCAPE ARCHITECTURE, P.C.
UNAUTHORIZED ALTERNATIONS TO THIS DOCUMENT IS A VIOLATION OF SECTION 7209 OF THE NEW YORK STATE EDUCATION LAW.

LEGEND

DESCRIPTION	EXISTING	PROPOSED
PROPERTY LINE		
EASEMENT LINE		
SAWCUT		
INTERMEDIATE CONTOURS		
INDEX CONTOURS	25	
STORM DRAIN	SD SD	
GRAVITY SANITARY SEWER	SS SS	SS SS
WATER SERVICE	W W	
UNDERGROUND ELECTRIC	E E	
OVERHEAD ELECTRIC	OE OE	
TELEPHONE SERVICE	T T	
COMMUNICATIONS SERVICE	T-C T-C	
GAS SERVICE	G G	
OVERHEAD UTILITY (UNSPECIFIED)	OHW OHW	
CURB		
EDGE OF PAVEMENT		
SIDEWALK		
FENCE - WOOD POST		
STORM DRAIN STRUCTURES	MANHOLE CATCH BASIN	
SANITARY SEWER MANHOLE	S	
WATER SERVICE STRUCTURES	HYDRANT	HYDRANT
ELECTRIC SERVICE STRUCTURES	UTILITY CO. POLE # MANHOLE LIGHT	
TELECOMMUNICATIONS MANHOLE	T	
TREELINE		
TREE	EVERGREEN DECIDUOUS	EVERGREEN DECIDUOUS

LEGEND

DEMOLITION / GEOTECHNICAL	
UTILITY TO BE ABANDONED	
UTILITY OR SITE ITEM TO BE DEMOLISHED	
ASPHALT PAVEMENT DEMOLITION	
BUILDING DEMOLITION	
TREE CLEARING	

ABBREVIATIONS

ABDN('D)	ABANDON(ED)
BIT	BITUMINOUS
BLDG	BUILDING
CB	CATCH BASIN
CO	CLEAN OUT
CONC	CONCRETE
DI	DUCTILE IRON PIPE
DIA	DIAMETER
DMH	DRAIN MANHOLE
E	EAST
EL/ELEV	ELEVATION
ELEC	ELECTRIC
EMH	ELECTRIC MANHOLE
EOP	EDGE OF PAVEMENT
EXIST	EXISTING
FES	FLARED END SECTION
FF	FINISH FLOOR
G	GAS
HDPE	HIGH DENSITY POLYETHYLENE
HMA	HOT MIX ASPHALT
HYD	HYDRANT
IN	INCHES
INV	INVERT
LP	LIGHT POLE
MAX	MAXIMUM
MH	MANHOLE
MIN	MINIMUM
MISC	MISCELLANEOUS
MON	MONUMENT
N	NORTH
NITC	NOT IN THIS CONTRACT
NTS	NOT TO SCALE
N/A	NOT APPLICABLE
N/F	NOW OR FORMERLY
OC	ON CENTER
OCS	OUTLET CONTROL STRUCTURE
OH	OVERHEAD
PERF	PERFORATED
PVC	POLYVINYLCHLORIDE
PVMT	PAVEMENT
R	RADIUS
RD	ROOF DRAIN
REV	REVISION
ROW	RIGHT OF WAY
SAN	SANITARY
SCH	SCHEDULE
SF	SQUARE FOOT
SMH	SEWER MANHOLE
STA	STATION
STRM	STORM
TEL	TEL-DATA
TP	TEST PIT
TYP	TYPICAL
UP	UTILITY POLE
W	WATER
WG	WATER GATE
WV	WATER VALVE

BASE MAP NOTES

1. THE EXISTING CONDITIONS INFORMATION SHOWN ON THE DRAWINGS IS BASED ON THE FOLLOWING:
   - DRAWINGS TITLED "MAP OF A TOPOGRAPHICAL SURVEY MADE FOR THE CHARLTON SCHOOL", PREPARED BY VAN DUSEN & STEVES LAND SURVEYORS, AND DATED FEBRUARY 17, 2020.
   - DRAWINGS TITLED "TOPOGRAPHIC SURVEY OF A PORTION OF CHARLTON SCHOOL", PREPARED BY AUSFELD & WALDRUFF LAND SURVEYORS LLP, AND DATED APRIL 25, 2008.
   - FIELD OBSERVATIONS OF SEPTIC ABSORPTION AREAS PERFORMED BY TIGHE & BOND AND ODORLESS SANITARY CLEANERS ON AUGUST 4, 2020.
2. HORIZONTAL DATUM: NAD83
3. VERTICAL DATUM: NAVD88

GENERAL NOTES

1. NOTIFY UDIG NY AT 1-800-962-7962 AND OTHER UTILITY OWNERS IN THE AREA NOT ON THE UDIG NY LIST AT LEAST 72 HOURS PRIOR TO ANY DIGGING, TRENCHING, ROCK REMOVAL, DEMOLITION, BORING, BACKFILLING, GRADING, LANDSCAPING, OR ANY OTHER EARTH MOVING OPERATIONS.
2. LOCATIONS OF EXISTING UTILITIES ARE APPROXIMATE. IN ADDITION, SOME UTILITIES MAY NOT BE SHOWN. DETERMINE THE EXACT LOCATION OF UTILITIES BY TEST PIT OR OTHER METHODS, AS NECESSARY TO PREVENT DAMAGE TO UTILITIES AND/OR INTERRUPTIONS IN UTILITY SERVICE. PERFORM TEST PIT EXCAVATIONS AND OTHER INVESTIGATIONS TO LOCATE UTILITIES, AND PROVIDE THIS INFORMATION TO THE ENGINEER, PRIOR TO CONSTRUCTING THE PROPOSED IMPROVEMENTS. LOCATE ALL EXISTING UTILITIES TO BE CROSSED BY HAND EXCAVATION.
3. NOT ALL OF THE UTILITY SERVICES TO BUILDINGS ARE SHOWN. THE CONTRACTOR SHALL ANTICIPATE THAT EACH PROPERTY HAS SERVICE CONNECTIONS FOR THE VARIOUS UTILITIES.
4. BOLD TEXT AND LINES INDICATE PROPOSED WORK. LIGHT TEXT AND LINES INDICATE APPROXIMATE EXISTING CONDITIONS.
5. TIGHE & BOND ASSUMES NO RESPONSIBILITY FOR ANY ISSUES, LEGAL OR OTHERWISE, RESULTING FROM CHANGES MADE TO THESE DRAWINGS WITHOUT WRITTEN AUTHORIZATION FROM TIGHE & BOND.
6. EXCAVATE ADDITIONAL TEST PITS TO LOCATE EXISTING UTILITIES AS DIRECTED OR APPROVED BY THE ENGINEER.
7. NOTIFY THE ENGINEER OF ANY UTILITIES IDENTIFIED DURING CONSTRUCTION THAT ARE NOT SHOWN ON THE DRAWINGS OR THAT DIFFER IN SIZE OR MATERIAL.
8. THE CONTRACTOR IS RESPONSIBLE FOR SITE SAFETY; COORDINATION WITH THE OWNER, ALL SUBCONTRACTORS, AND WITH OTHER CONTRACTORS WORKING WITHIN THE LIMITS OF WORK, THE MEANS AND METHODS OF CONSTRUCTING THE PROPOSED WORK.
9. OBTAIN, PAY FOR AND COMPLY WITH PERMITS, NOTICES AND FEES NECESSARY TO COMPLETE THE WORK. ARRANGE AND PAY FOR NECESSARY INSPECTIONS AND APPROVALS FROM THE JURISDICTIONAL AUTHORITIES.
10. SHORE UTILITY TRENCHES WHERE FIELD CONDITIONS DICTATE AND/OR WHERE REQUIRED BY LOCAL, STATE AND FEDERAL HEALTH AND SAFETY CODES.
11. FIELD VERIFY ALL EXISTING CONDITIONS PRIOR TO CONSTRUCTION. IF FIELD CONDITIONS ARE OBSERVED THAT VARY SIGNIFICANTLY FROM THOSE SHOWN ON THE DRAWINGS, IMMEDIATELY NOTIFY THE ENGINEER IN WRITING FOR RESOLUTION OF THE CONFLICTING INFORMATION.
12. PROTECT AND MAINTAIN ALL UTILITIES IN THE AREAS UNDER CONSTRUCTION DURING THE WORK. LEAVE ALL PIPES AND STRUCTURES WITHIN THE LIMITS OF THE CONTRACT IN A CLEAN AND OPERABLE CONDITION AT THE COMPLETION OF THE WORK. TAKE ALL NECESSARY PRECAUTIONS TO PREVENT SAND AND SILT FROM DISTURBED AREAS FROM ENTERING THE DRAINAGE SYSTEM.
13. NOTIFY THE ENGINEER IN WRITING OF ANY CONFLICT, ERROR, AMBIGUITY, OR DISCREPANCY WITH THE PLANS OR BETWEEN THE PLANS AND ANY APPLICABLE LAW, REGULATION, CODE, STANDARD SPECIFICATION, OR MANUFACTURER'S INSTRUCTIONS.
14. THE CONTRACTOR IS RESPONSIBLE FOR SUPPORT OF EXISTING UTILITIES AND REPAIR OR REPLACEMENT COSTS OF UTILITIES DAMAGED DURING CONSTRUCTION, WHETHER ABOVE OR BELOW GRADE. REPLACE DAMAGED UTILITIES IMMEDIATELY AT NO ADDITIONAL COST TO THE OWNER AND AT NO COST TO THE PROPERTY OWNER.
15. TAKE NECESSARY MEASURES AND PROVIDE CONTINUOUS BARRIERS OF SUFFICIENT TYPE, SIZE, AND STRENGTH TO PREVENT ACCESS TO ALL WORK AND STAGING AREAS AT THE COMPLETION OF EACH DAYS WORK.
16. NO OPEN TRENCHES WILL BE ALLOWED OVER NIGHT. THE USE OF ROAD PLATES TO PROTECT THE EXCAVATION WILL BE CONSIDERED UPON REQUEST, BUT BACKFILLING IS PREFERRED.
17. THE CONTRACTOR IS RESPONSIBLE FOR ALL NECESSARY TRAFFIC CONTROL/SAFETY DEVICES TO ENSURE SAFE VEHICULAR AND PEDESTRIAN ACCESS THROUGH THE WORK AREA, OR FOR SAFELY IMPLEMENTING DETOURS AROUND THE WORK AREA. PERFORM TRAFFIC CONTROL IN ACCORDANCE WITH THE CONTRACTOR'S APPROVED TRAFFIC CONTROL PLAN.
18. MAINTAIN EMERGENCY ACCESS TO ALL PROPERTIES WITHIN THE PROJECT AREA AT ALL TIMES DURING CONSTRUCTION.
19. WHEN WORKING IN THE ROAD, PROVIDE THE OWNER AND LOCAL FIRE/POLICE/SCHOOL AUTHORITIES A DETAILED PLAN OF APPROACH INDICATING METHODS OF PROPOSED TRAFFIC ROUTING ON A DAILY BASIS. PROVIDE COORDINATION TO ENSURE COMMUNICATION AND COORDINATION BETWEEN THE OWNER, CONTRACTOR AND LOCAL FIRE/POLICE/SCHOOL AUTHORITIES THROUGHOUT THE CONSTRUCTION PERIOD.
20. REMOVE AND DISPOSE OF ALL CONSTRUCTION-RELATED WASTE MATERIALS AND DEBRIS IN STRICT ACCORDANCE WITH ALL APPLICABLE LOCAL, STATE, AND FEDERAL LAWS.
21. THE TERM "DEMOLISH" USED ON THE DRAWINGS MEANS TO REMOVE AND DISPOSE OF IN ACCORDANCE WITH LOCAL, STATE, AND FEDERAL REQUIREMENTS.
22. THE TERM "ABANDON" USED ON THE DRAWINGS MEANS TO LEAVE IN PLACE AND TAKE APPROPRIATE MEASURES TO DECOMMISSION AS SPECIFIED OR NOTED ON THE DRAWINGS.
23. ALL PROPOSED WORK MAY BE ADJUSTED IN THE FIELD BY THE OWNER'S PROJECT REPRESENTATIVE TO MEET EXISTING CONDITIONS.

SURFACE RESTORATION NOTES

1. ALL PAVEMENT DAMAGED BY THE CONTRACTOR'S OPERATIONS SHALL BE REPLACED IN ACCORDANCE WITH THE CONTRACT DOCUMENTS.
2. PROVIDE SITE GRADING AT ACCESSIBLE SIDEWALK RAMPS, SIDEWALKS, AND BUILDING ENTRANCES THAT IS CONSISTENT WITH THE RELEVANT ACCESS REQUIREMENTS OF THE ARCHITECTURAL BARRIERS ACT (ABA), THE AMERICANS WITH DISABILITIES ACT (ADA), AND MA ARCHITECTURAL ACCESS BOARD REQUIREMENTS (AAB). SMALL CHANGES IN GRADE OVER RELATIVELY SHORT DISTANCES (E.G. AT PARKING SPACES, ACCESSIBLE ROUTES, AND RAMPS) MIGHT NOT BE CLEARLY DEPICTED WITHIN THE CONTOUR INTERVAL SHOWN. COMPLY WITH THE CRITERIA IN THESE STANDARDS. SELECT MAXIMUM SLOPE CRITERIA ARE REPRODUCED BELOW:
   - ACCESSIBLE PARKING STALL AND PASSENGER LOADING ZONE (ANY DIRECTION) SLOPE < 2.0%
   - LONGITUDINAL SLOPE ALONG ACCESSIBLE ROUTES < 5.0%
   - CROSS SLOPE ALONG ACCESSIBLE ROUTES < 2.0%
3. PROTECT PROJECT FEATURES (E.G., WALLS, FENCES, MAIL BOXES, SIGNS, SIDEWALKS, CURBING, STAIRS, WALKWAYS, TREES, ETC.) FROM DAMAGE DURING CONSTRUCTION, INCLUDING PROVIDING TEMPORARY SUPPORTS, WHEN APPROPRIATE.
4. IF REMOVAL OF PROJECT FEATURES IS REQUIRED IN ORDER TO PERFORM THE PROPOSED WORK, REMOVE THOSE SITE FEATURES ONLY UPON APPROVAL OF ENGINEER. REPLACE ALL REMOVED PROJECT FEATURES; NEW ITEMS SHALL BE EQUAL OR BETTER IN QUALITY AND CONDITION TO THE ITEMS REMOVED.
5. EXISTING SURVEY MONUMENTS DISTURBED BY THE CONTRACTOR SHALL BE REPLACED BY A LAND SURVEYOR LICENSED IN THE STATE IN WHICH THE WORK IS PERFORMED AT NO ADDITIONAL COST TO THE OWNER.
6. COORDINATE THE ADJUSTMENT OF EXISTING UTILITY STRUCTURES WITH EACH RESPONSIBLE UTILITY OWNER PRIOR TO RECONSTRUCTION AND/OR PAVING OPERATIONS. RAISE ALL STRUCTURES TO FINISHED GRADES PRIOR TO THE END OF THE CONSTRUCTION SEASON AND PRIOR TO FINISHED PAVING.
7. REPAIR DISTURBED PAVED SURFACES AT THE END OF EACH WORK WEEK, UNLESS OTHERWISE APPROVED/REQUIRED BY THE OWNER.
8. PLACE TEMPORARY BITUMINOUS CONCRETE PAVEMENT AT DISTURBED PORTLAND CEMENT CONCRETE SIDEWALKS AND DRIVEWAYS AT THE END OF EACH WORK WEEK, UNLESS OTHERWISE APPROVED/REQUIRED BY THE OWNER.
9. TRANSFER ALL TEMPORARY BENCHMARKS, AS NECESSARY.
10. ACCOMMODATE PEDESTRIAN TRAFFIC WHERE A SIDEWALK IS TO BE CLOSED FOR SAFETY. "SIDEWALK CLOSED HERE" SIGNS SHALL BE USED AT THE NEAREST SAFE INTERSECTION. SEE TRAFFIC CONTROL DETAILS FOR SIGN INFORMATION.
11. RESTORE ALL AREAS DISTURBED BY THE CONTRACTOR BEYOND THE PAYLINE LIMITS TO ORIGINAL CONDITIONS AT NO ADDITIONAL COST TO THE OWNER.
12. REGRADE ALL UNPAVED AREAS DISTURBED BY THE WORK AS REQUIRED. REPAIR/REPLACE PAVED SURFACES DISTURBED BY THE WORK IN-KIND, UNLESS OTHERWISE NOTED. RESTORE SURFACES TO EXISTING OR PROPOSED CONDITIONS AS INDICATED ON THE DRAWINGS.
13. PROVIDE A SMOOTH, FLUSH TRANSITION BETWEEN ALL NEW AND EXISTING PAVEMENTS AND WALKING SURFACES.

EROSION CONTROL AND RESOURCE AREA PROTECTION NOTES

1. PROVIDE ALL EROSION CONTROL MEASURES SHOWN, SPECIFIED, REQUIRED BY PERMIT, AND/OR REQUIRED BY THE ENGINEER PRIOR TO ANY CONSTRUCTION OR IMMEDIATELY UPON REQUEST. MAINTAIN SUCH CONTROL MEASURES UNTIL FINAL SURFACE TREATMENTS ARE IN PLACE AND/OR UNTIL PERMANENT VEGETATION IS ESTABLISHED. INSPECT AFTER EACH RAINSTORM AND DURING MAJOR STORM EVENTS TO CONFIRM THAT ALL SEDIMENTATION AND EROSION CONTROL MEASURES REQUIRED ARE IN PLACE AND EFFECTIVE.
2. INSTALL SILT SACKS OR OTHER APPROVED SEDIMENTATION BARRIERS IN/AT ALL CATCH BASINS IN THE PROJECT AREA.
3. COMPACT, STABILIZE, AND LOAM AND SEED SIDE SLOPES, SHOULDER AREAS AND DISTURBED VEGETATED AREAS IN ACCORDANCE WITH THE CONTRACT DOCUMENTS AND AS REQUIRED BY PERMITS. GRADE SIDE SLOPES, SHOULDER AREAS AND DISTURBED VEGETATED AREAS TO A MAXIMUM SLOPE OF 3 HORIZONTAL TO 1 VERTICAL (3H:1V), WHERE POSSIBLE. PROVIDE BIODEGRADABLE EROSION CONTROL BLANKETS TO PREVENT EROSION WHERE SLOPES ARE STEEPER THAN 3H:1V.
4. SETTLE OR FILTER ALL SILT-LADEN WATER FROM DEWATERING ACTIVITIES IN A SEDIMENTATION OR FILTER BAG TO REMOVE SEDIMENTS PRIOR TO RELEASE USING A SEDIMENTATION OR FILTER BAG LOCATED DOWN-GRADIENT OF THE DEWATERED AREA.
5. REMOVE AND PROPERLY DISPOSE OF SILT TRAPPED AT BARRIERS IN UPLAND AREAS OUTSIDE BUFFER ZONES. REMOVE MATERIALS DEPOSITED IN ANY TEMPORARY SETTLING BASINS AT THE COMPLETION OF THE PROJECT. RESTORE ALL DISTURBED AREAS TO THEIR PRECONSTRUCTION CONDITION.
6. SWEEP, COLLECT, REMOVE AND DISPOSE OF ANY SEDIMENT TRACKED ONTO PUBLIC RIGHT-OF-WAYS AT THE END OF EACH DAY.
7. LOAM AND SEED ALL DISTURBED VEGETATED AREAS TO ESTABLISH COVER AND STABILIZATION AS SOON AS POSSIBLE FOLLOWING DISTURBANCE.
8. MAINTAIN AN ADDITIONAL SUPPLY OF EROSION CONTROL MEASURES ON-SITE FOR EMERGENCY REPAIRS.
9. STORE FUEL, OIL, PAINT, OR OTHER HAZARDOUS MATERIALS IN A SECONDARY CONTAINER AND REMOVE TO A SECURE LOCKED AND COVERED AREA DURING NON-WORK HOURS.
10. PROVIDE A SUPPLY OF ABSORBENT SPILL RESPONSE MATERIALS SUCH AS BOOMS, BLANKETS, AND OIL ABSORBENT MATERIALS AT THE CONSTRUCTION SITE AT ALL TIMES TO CLEAN UP POTENTIAL SPILLS OF HAZARDOUS MATERIALS. IMMEDIATELY REPORT SPILLS OF HAZARDOUS MATERIALS TO THE STATE ENVIRONMENTAL AGENCY AND THE MUNICIPALITY WHERE THE WORK IS OCCURRING.

Tighe&Bond

PERMIT SET NOT FOR CONSTRUCTION

THIS DOCUMENT IS INCOMPLETE AND IS RELEASED TEMPORARILY FOR PROGRESS REVIEW ONLY. IT IS NOT INTENDED FOR BIDDING OR CONSTRUCTION PURPOSES.

Phase 1A Improvements

The Charlton School

Charlton, NY

SERVICES PROVIDED IN NEW YORK BY T&B ENGINEERING AND LANDSCAPE ARCHITECTURE, P.C.

UNAUTHORIZED ALTERNATIONS TO THIS DOCUMENT IS A VIOLATION OF SECTION 7209 OF THE NEW YORK STATE EDUCATION LAW.

MARK	DATE	DESCRIPTION

PROJECT NO:	C5112-002
DATE:	6/16/2023
FILE:	C5112-001 Plan Set.dwg
DRAWN BY:	CJR
CHECKED BY:	BKN
APPROVED BY:	---

GENERAL NOTES, LEGEND & ABBREVIATIONS

SCALE: NO SCALE

G-002

Last Saved: 6/29/2023
Plotted On:Jun 29, 2023-4:34pm By: RLewis
Tighe & Bond:J:\C\C5112 The Charlton School\Drawings_Figures\AutoCAD\Sheet\C5112-001 Plan Set.dwg

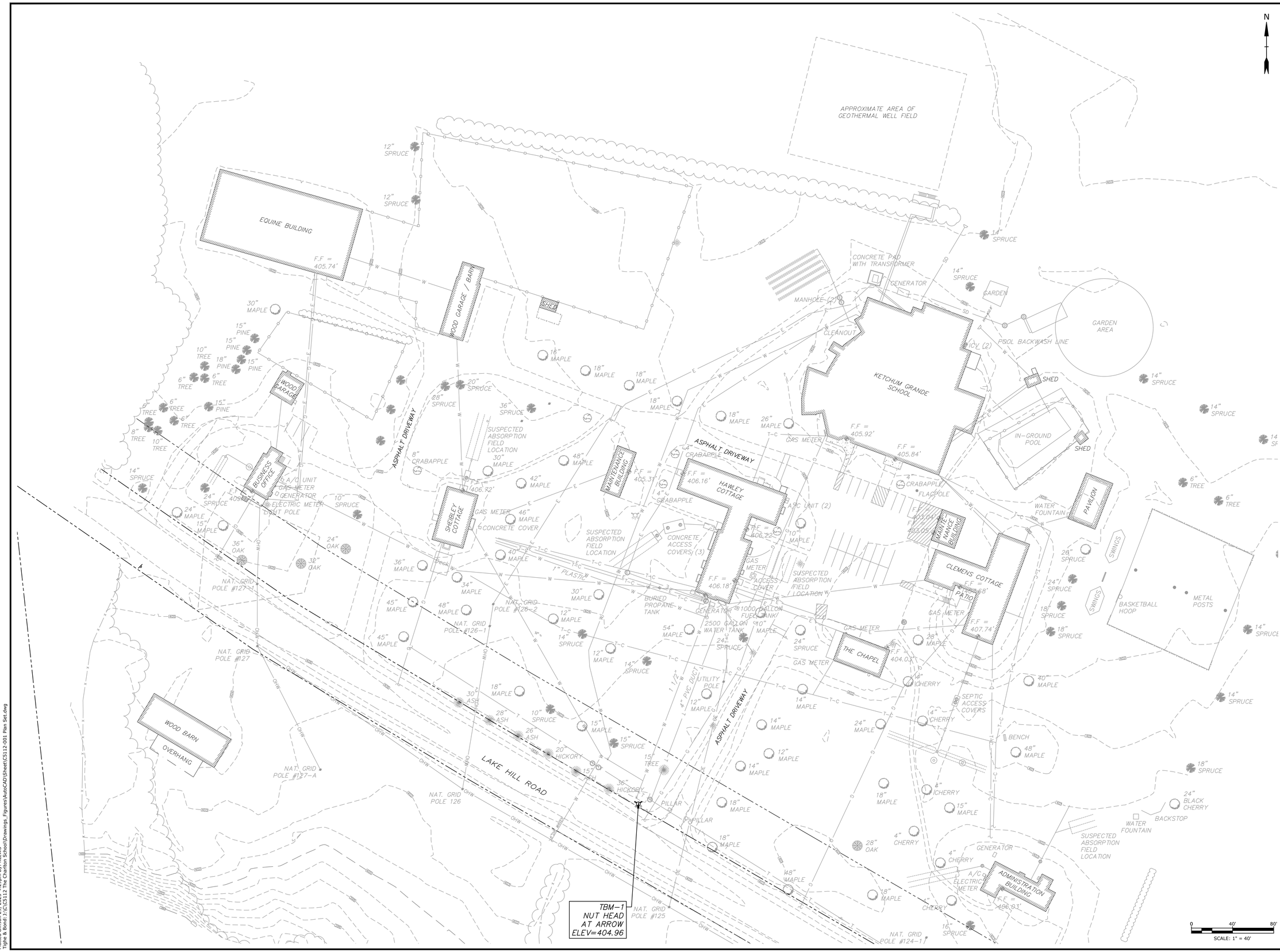

Tighe&Bond

PERMIT SET
NOT FOR CONSTRUCTION

THIS DOCUMENT IS INCOMPLETE AND IS RELEASED TEMPORARILY FOR PROGRESS REVIEW ONLY. IT IS NOT INTENDED FOR BIDDING OR CONSTRUCTION PURPOSES.

Phase 1A Improvements

The Charlton School

Charlton, NY

SERVICES PROVIDED IN NEW YORK BY T&B ENGINEERING AND LANDSCAPE ARCHITECTURE, P.C.

UNAUTHORIZED ALTERNATIONS TO THIS DOCUMENT IS A VIOLATION OF SECTION 7209 OF THE NEW YORK STATE EDUCATION LAW.

MARK	DATE	DESCRIPTION

PROJECT NO:	C5112-002
DATE:	6/16/2023
FILE:	C5112-001 Plan Set.dwg
DRAWN BY:	CJR
CHECKED BY:	BKN
APPROVED BY:	---

EXISTING CONDITIONS PLAN

SCALE: 1" = 40'

C-100
SHEET 3 OF 15

Last Saved: 6/29/2023
Plotted On:Jun 29, 2023-4:29pm By: RLewis
Tighe & Bond:J:\CC\C5112 The Charlton School\Drawings_Figures\AutoCAD\Sheet\C5112-001 Plan Set.dwg

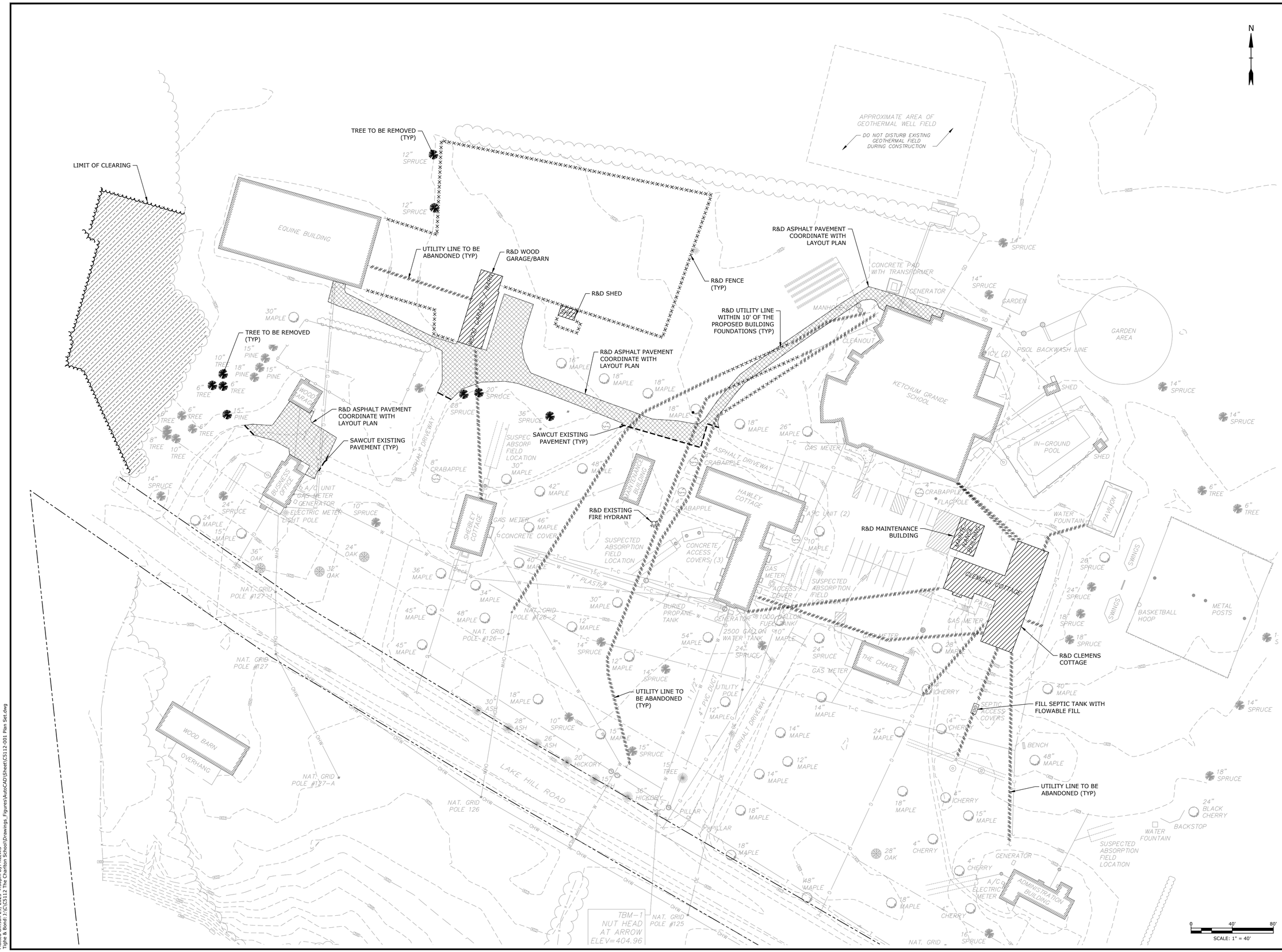

Tighe&Bond

PERMIT SET NOT FOR CONSTRUCTION

THIS DOCUMENT IS INCOMPLETE AND IS RELEASED TEMPORARILY FOR PROGRESS REVIEW ONLY. IT IS NOT INTENDED FOR BIDDING OR CONSTRUCTION PURPOSES.

Phase 1A Improvements

The Charlton School

Charlton, NY

SERVICES PROVIDED IN NEW YORK BY T&B ENGINEERING AND LANDSCAPE ARCHITECTURE, P.C.

UNAUTHORIZED ALTERNATIONS TO THIS DOCUMENT IS A VIOLATION OF SECTION 7209 OF THE NEW YORK STATE EDUCATION LAW.

MARK	DATE	DESCRIPTION

PROJECT NO:	C5112-002
DATE:	6/16/2023
FILE:	C5112-001 Plan Set.dwg
DRAWN BY:	CJR
CHECKED BY:	BKN
APPROVED BY:	---

DEMOLITION PLAN

SCALE: 1" = 40'

C-200

SHEET 4 OF 15

Last Saved: 6/29/2023
Plotted On:Jun 29, 2023-4:30pm By: RLewis
Tighe & Bond:J:\C\C5112 The Charlton School\Drawings_Figures\AutoCAD\Sheet\C5112-001 Plan Set.dwg

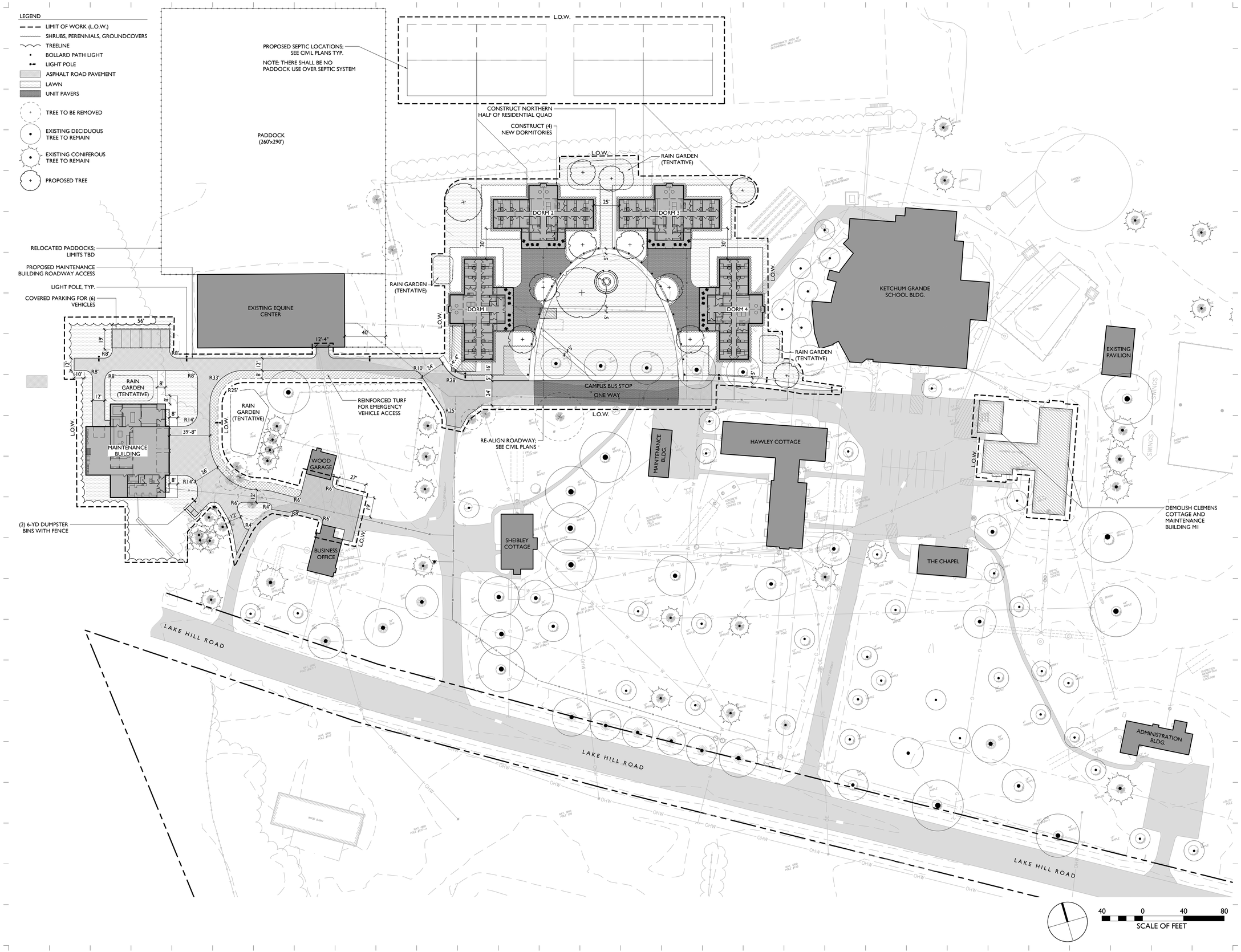

WHLA
WAGNER HODGSON

LANDSCAPE ARCHITECTURE

VT 802.864.0010 NY 518.567.1791 wagnerhodgson.com

33% SD SET
PROGRESS SET
NOT FOR CONSTRUCTION

NO.	DESCRIPTION	DATE

CHARLTON SCHOOL

322 Lake Hill Rd, Burnt Hills, NY 12027

PHASE 1A OVERALL LAYOUT & MATERIALS PLAN

JOB NO. 23-329
SCALE: 1" = 40'-0"
DRAWN BY: SF, DB
DATE: 6.29.2023

L100

© WHLA ALL RIGHTS RESERVED 2023

PLOT DATE: 6/29/2023 5:26 PM
FILE PATH: C:\USERS\DIBUR\ONEDRIVE\DESKTOP\WHLA REMOTE\CHARLTON\CAD\SHEETS\L100_MATERIALS & LAYOUT PLAN.DWG

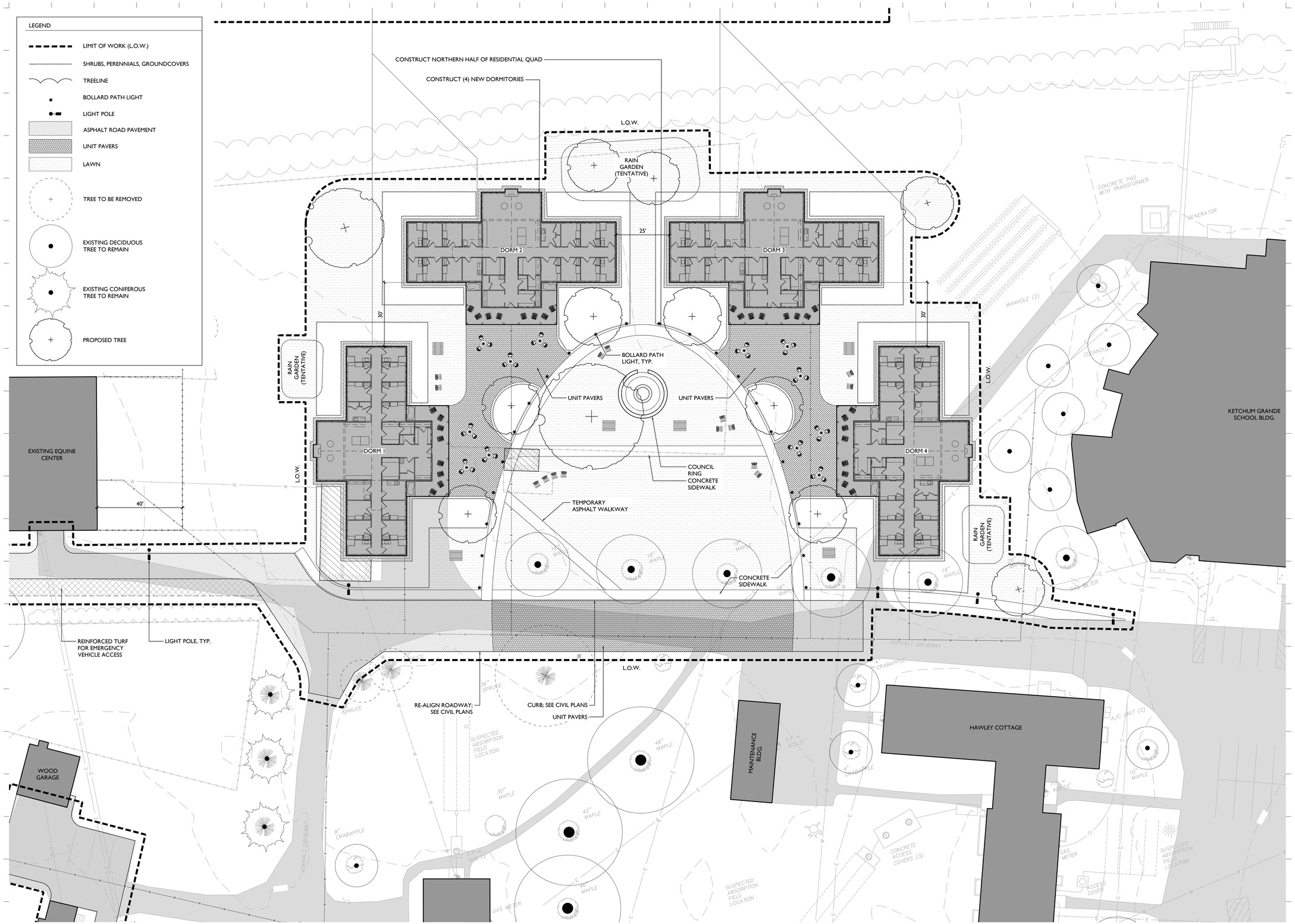

WHLA
WAGNER HODGSON

LANDSCAPE ARCHITECTURE
VT 802.864.0010 NY 518.567.1791 wagnerhodgson.com

33% SD SET
PROGRESS SET
NOT FOR CONSTRUCTION

NO.	DESCRIPTION	DATE

CHARLTON SCHOOL

322 Lake Hill Rd, Burnt Hills, NY 12027

LAYOUT & MATERIALS PLAN ENLARGEMENT

QUADRANGLE

JOB NO. 23-329
SCALE: 1" = 20'-0"
DRAWN BY: SF, DB
DATE: 6.29.2023

L101

© WHLA ALL RIGHTS RESERVED 2023

PLOT DATE: 6/29/2023 5:05 PM
FILE PATH: C:\USERS\DIBUR\ONEDRIVE\DESKTOP\WHLA REMOTE\CHARLTON\CAD\SHEETS\L100_MATERIALS & LAYOUT PLAN.DWG

ZONING SCHEDULE SUMMARY		
TAX PARCEL NUMBER: 256.1-38		
TOTAL SITE AREA: 267.1 AC		
CURRENT ZONING: R/A RESIDENTIAL/AGRICULTURE		
ZONING REQUIREMENTS	REQUIRED	PROVIDED
MINIMUM LOT AREA	2 AC	267.1 AC
MINIMUM LOT WIDTH	200'	393.4'
MINIMUM LOT FRONTAGE	200'	4650.0'
MAX. HEIGHT OF DWELLING	40'	< 40'
MINIMUM SETBACK DIMENSIONS:		
FRONT YARD SETBACK	60'	80.4'
TOTAL TWO SIDE YARDS SETBACK	100'	3343.0'
SIDE YARD SETBACK	40'	1264.3'
REAR YARD SETBACK	50'	1470.0'
NOTE: THE TAX PARCEL BOUNDARY WAS USED IN THE CALCULATION OF SOME OF THE ZONING INFORMATION		

Last Saved: 6/29/2023
Plotted On:Jun 29, 2023-4:43pm By: RLewis
Tighe & Bond:J:\C\C5112 The Charlton School\Drawings_Figures\AutoCAD\Sheet\C5112-001 Plan Set.dwg

Tighe&Bond

PERMIT SET NOT FOR CONSTRUCTION

THIS DOCUMENT IS INCOMPLETE AND IS RELEASED TEMPORARILY FOR PROGRESS REVIEW ONLY. IT IS NOT INTENDED FOR BIDDING OR CONSTRUCTION PURPOSES.

Phase 1A Improvements

The Charlton School

Charlton, NY

SERVICES PROVIDED IN NEW YORK BY T&B ENGINEERING AND LANDSCAPE ARCHITECTURE, P.C.

UNAUTHORIZED ALTERNATIONS TO THIS DOCUMENT IS A VIOLATION OF SECTION 7209 OF THE NEW YORK STATE EDUCATION LAW.

MARK	DATE	DESCRIPTION

PROJECT NO:	C5112-002
DATE:	6/16/2023
FILE:	C5112-001 Plan Set.dwg
DRAWN BY:	CJR
CHECKED BY:	BKN
APPROVED BY:	---

SITE PLAN

SCALE: 1" = 40'

C-300

SHEET 7 OF 15

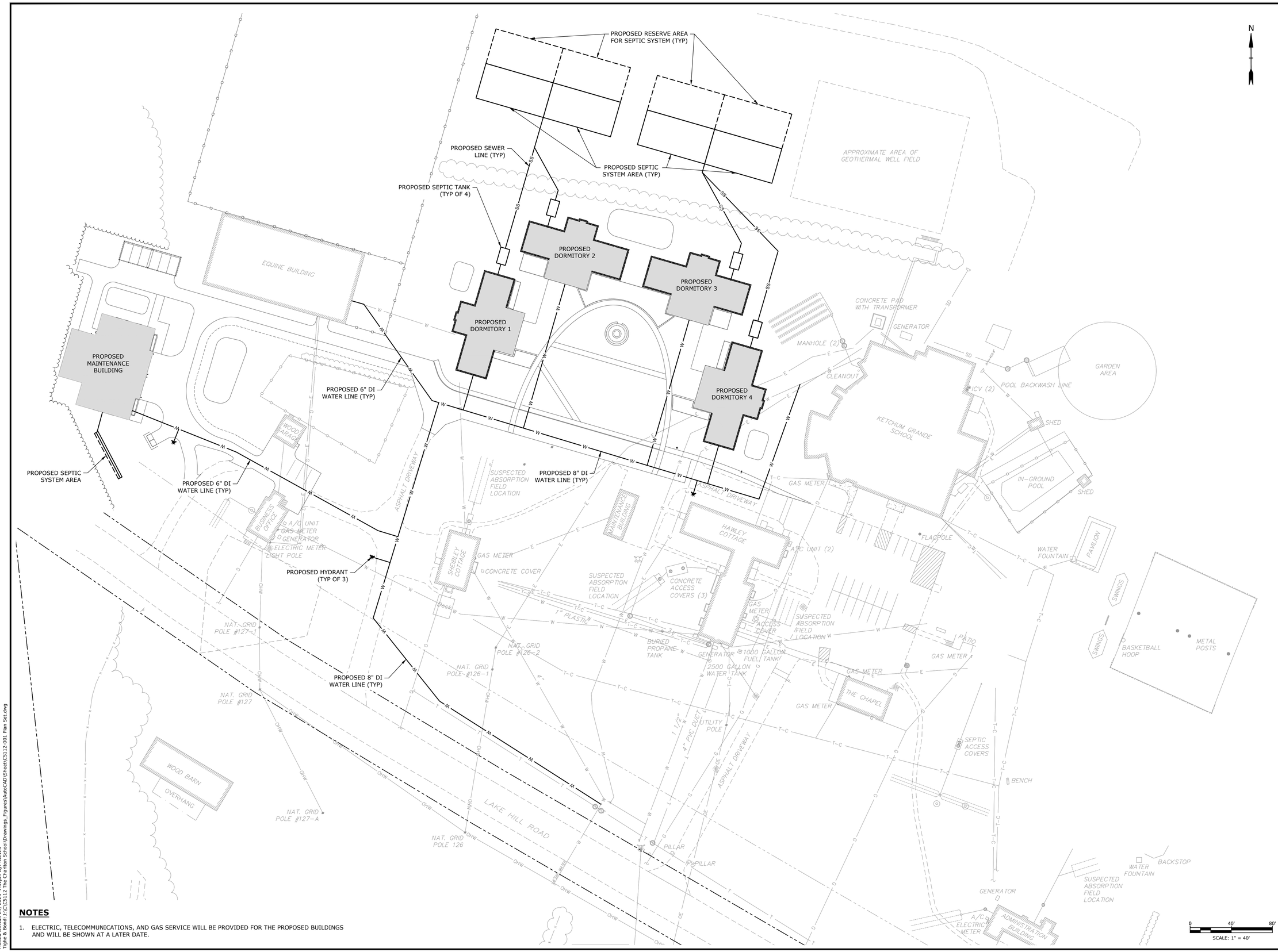

NOTES

1. ELECTRIC, TELECOMMUNICATIONS, AND GAS SERVICE WILL BE PROVIDED FOR THE PROPOSED BUILDINGS AND WILL BE SHOWN AT A LATER DATE.

Last Saved: 6/29/2023
Plotted On:Jun 29, 2023-4:31pm By: RLewis
Tighe & Bond: J:\C\C5112 The Charlton School\Drawings_Figures\AutoCAD\Sheet\C5112-001 Plan Set.dwg

Tighe&Bond

PERMIT SET NOT FOR CONSTRUCTION

THIS DOCUMENT IS INCOMPLETE AND IS RELEASED TEMPORARILY FOR PROGRESS REVIEW ONLY. IT IS NOT INTENDED FOR BIDDING OR CONSTRUCTION PURPOSES.

Phase 1A Improvements

The Charlton School

Charlton, NY

SERVICES PROVIDED IN NEW YORK BY T&B ENGINEERING AND LANDSCAPE ARCHITECTURE, P.C.

UNAUTHORIZED ALTERNATIONS TO THIS DOCUMENT IS A VIOLATION OF SECTION 7209 OF THE NEW YORK STATE EDUCATION LAW.

MARK	DATE	DESCRIPTION

PROJECT NO:	C5112-002
DATE:	6/16/2023
FILE:	C5112-001 Plan Set.dwg
DRAWN BY:	CJR
CHECKED BY:	BKN
APPROVED BY:	---

UTILITY PLAN

SCALE: 1" = 40'

C-400

SHEET 8 OF 15

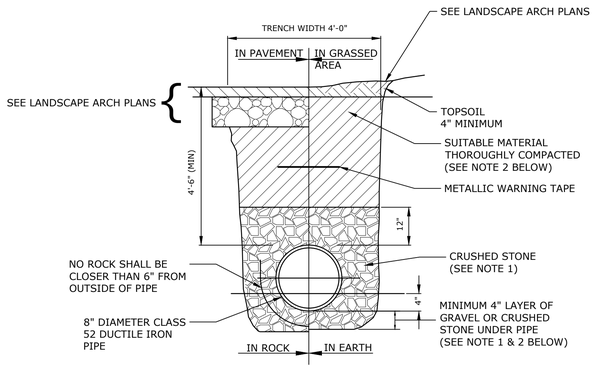

NOTES

1. A WATERSTOP OF DEAD SAND SHALL BE PLACED AT ALL JOINTS AND FITTINGS TO A DISTANCE OF TWELVE (12") INCHES BEYOND EACH JOINT (IN BOTH DIRECTIONS). THE DEAD SAND IS TO BE PLACED TO THE SAME HEIGHT AS THE GRAVEL OR STONE BEDDING PLACED BETWEEN THE WATERSTOPS.
2. COMPACTION METHODS SHALL ATTAIN 95% OF MAXIMUM DRY DENSITY AT OPTIMUM MOISTURE CONTENT AS DETERMINED IN ACCORDANCE WITH ASTM D698, METHOD C.

TYPICAL WATER TRENCH

DETAIL	1
NO SCALE	-

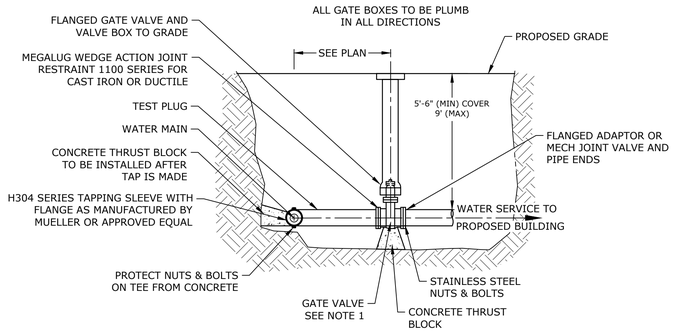

NOTES

1. GATE VALVE SHALL BE MODEL A-2362 RWGV FLXFL, AS MANUFACTURED BY MUELLER WATER PRODUCTS, INC., OR APPROVED EQUAL.
2. THE TRENCH IS TO BE DEWATERED AND IN COMPLIANCE WITH OSHA REQUIREMENTS FOR TRENCH EXCAVATION. THE WET TAP TO BE PERFORMED BY A CONTRACTOR APPROVED BY THE TOWN FOR THIS PURPOSE.

WATER SERVICE CONNECTION

DETAIL	2
NO SCALE	-

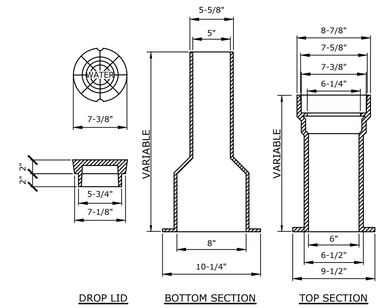

NOTES

1. PROVIDE A VALVE BOX OF THE ADJUSTABLE TYPE OF HEAVY PATTERN, CONSTRUCTED OF CAST IRON AND PROVIDED WITH A 6 INCH CAST IRON COVER FOR EACH BURIED VALVE.
2. VALVE BOXES SHALL BE MANUFACTURED IN NORTH AMERICA BY CLOW CORPORATION, TYLER/UNION CORPORATION, UNITED STATES FOUNDRIES, OR EQUAL.
3. VALVE BOXES SHALL BE ROUND, 2-PIECE, SLIDING TYPE, CAST IRON. THE UPPER SECTION OF EACH BOX SHALL HAVE A FLANGE ON TOP HAVING SUFFICIENT BEARING AREA TO PREVENT SETTLING. THE BOTTOM OF THE LOWER SECTION SHALL BE BELLED TO ENCLOSE THE OPERATING NUT OF THE VALVE. THE BARREL SHALL BE 5-1/2 INCH O.D. MINIMUM.

VALVE BOX DETAIL

DETAIL	3
NO SCALE	-

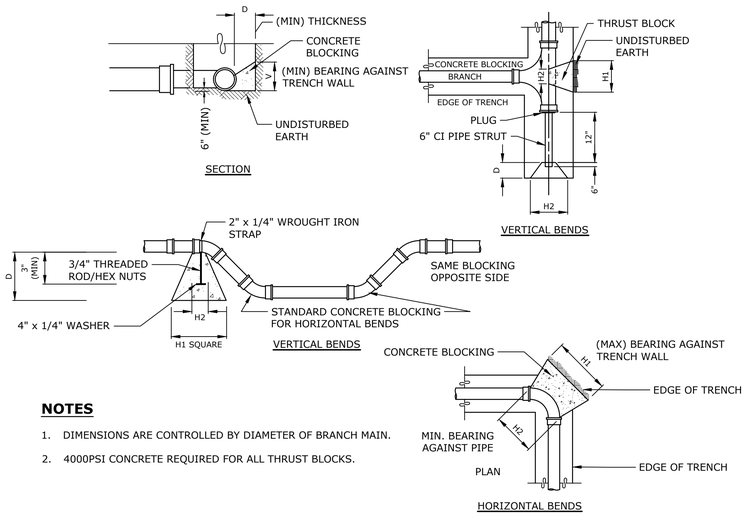

NOTES

1. DIMENSIONS ARE CONTROLLED BY DIAMETER OF BRANCH MAIN.
2. 4000PSI CONCRETE REQUIRED FOR ALL THRUST BLOCKS.

TABLE OF DIMENSIONS FOR CONCRETE BLOCKING

PIPE SIZE (H)	TEES, CROSSES & PLUGS					90° BENDS					45° BENDS					22-1/2° BENDS					11-1/4° BENDS				
	H1	H2	V	D	CU. FT.	H1	H2	V	D	CU. FT.	H1	H2	V	D	CU. FT.	H1	H2	V	D	CU. FT.	H1	H2	V	D	CU. FT.
6"Ø	24"	16"	18"	18"	3.50	30"	16"	18"	18"	4.05	24"	10"	16"	18"	3.20	24"	10"	16"	18"	3.20	24"	10"	16"	18"	3.20
8"Ø	36"	18"	18"	18"	5.05	39"	18"	24"	18"	7.30	30"	11"	18"	18"	3.95	24"	11"	18"	18"	3.45	24"	11"	16"	18"	3.40
12"Ø	54"	30"	24"	24"	13.4	54"	32"	36"	24"	18.15	42"	18"	24"	24"	9.60	24"	18"	24"	24"	6.60	24"	18"	21"	24"	6.10

THRUST RESTRAINTS

DETAIL	4
NO SCALE	-

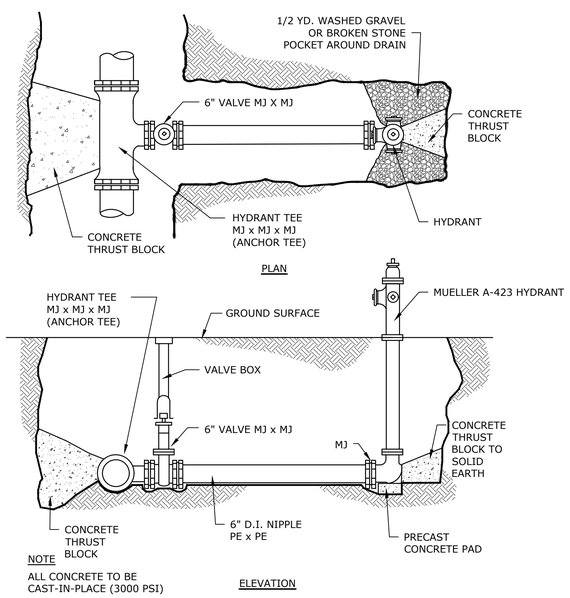

NOTES

1. ALL CONCRETE TO BE CAST-IN-PLACE (3000 PSI)
2. ALL MJ JOINTS SHALL HAVE RETAINER GLANDS
3. CARE SHALL BE TAKEN TO SHIELD HYDRANT BASE DRAIN HOLES DURING PLACEMENT OF THE CONCRETE THRUST BLOCK. DRAIN HOLES SHALL BE VERIFIED AS OPEN AND FREE OF OBSTRUCTIONS PRIOR TO BACKFILLING.
4. CARE SHALL BE TAKEN TO SHIELD ALL MECHANICAL JOINT GLANDS AND BOLTS DURING PLACEMENT OF CONCRETE THRUST BLOCK. ALL BOLTS AND GLANDS SHALL BE FREE AND UNOBSTRUCTED BEFORE BACKFILLING.
5. HYDRANT SHALL BE SET PLUMB. VERTICAL HYDRANT EXTENSIONS SHALL BE USED AS NECESSARY TO PROPERLY LOCATE THE BREAKAWAY FLANGE PER MANUFACTURERS RECOMMENDATIONS.
6. POLYETHYLENE SHEETING SHALL BE PLACED OVER THE FITTING AND/OR HYDRANT BASE TO PREVENT DIRECT CONTACT OF CONCRETE WITH THE FITTING.

TYPICAL HYDRANT TRENCH

DETAIL	5
NO SCALE	C-303

Tighe&Bond

PERMIT SET NOT FOR CONSTRUCTION

THIS DOCUMENT IS INCOMPLETE AND IS RELEASED TEMPORARILY FOR PROGRESS REVIEW ONLY. IT IS NOT INTENDED FOR BIDDING OR CONSTRUCTION PURPOSES.

Phase 1A Improvements

The Charlton School

Charlton, NY

SERVICES PROVIDED IN NEW YORK BY T&B ENGINEERING AND LANDSCAPE ARCHITECTURE, P.C.

UNAUTHORIZED ALTERNATIONS TO THIS DOCUMENT IS A VIOLATION OF SECTION 7209 OF THE NEW YORK STATE EDUCATION LAW.

MARK	DATE	DESCRIPTION

PROJECT NO:	C5112-002
DATE:	6/16/2023
FILE:	C5112-001 Details.dwg
DRAWN BY:	CJR
CHECKED BY:	BKN
APPROVED BY:	---

SITE DETAILS - 1

SCALE: NO SCALE

C-501

SHEET 9 OF 15

Last Saved: 6/29/2023
Plotted On:Jun 29, 2023-3:56pm By: RLewis
Tighe & Bond: J:\C\C5112 The Charlton School\Drawings_Figures\AutoCAD\Sheet\C5112-001 Details.dwg

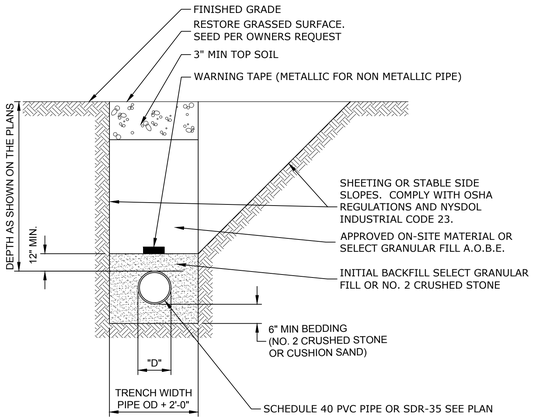

NOTES

1. COMPACT ALL BACKFILL TO 95% PROCTOR (ASTM D1557).

TYPICAL SANITARY TRENCH

DETAIL	1
NO SCALE	-

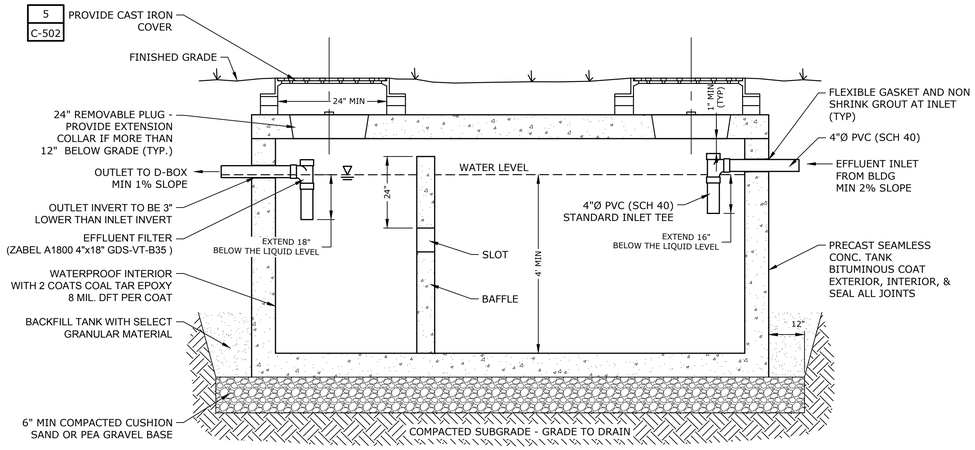

NOTES

1. SEPTIC TANK TO BE LHV PRECAST OR APPROVED EQUAL, PRECAST CONCRETE 4000 PSI @ 28 DAYS.
2. WATERPROOF EXTERIOR INCLUDING RISERS; WATER TEST FOR LEAKS PRIOR TO BACKFILL.
3. EFFLUENT FILTER SHALL BE CERTIFIED NSF STANDARD 46.
4. EFFLUENT FILTER SHALL BE SERVICED CONSISTENT WITH MANUFACTURERS RECOMMENDATIONS. EVERY 2 TO 5 YEARS BY A CERTIFIED SEPTIC TANK PUMPER OR INSTALLER.
5. THERE SHALL BE A MINIMUM OF ONE INCH CLEARANCE BETWEEN THE UNDERSIDE OF THE TOP OF THE TANK AND THE TOP OF ALL BAFFLES, PARTITION AND/OR TEES TO PERMIT VENTING OF TANK GASES.

PRECAST CONCRETE SEPTIC TANK

DETAIL	2
NO SCALE	-

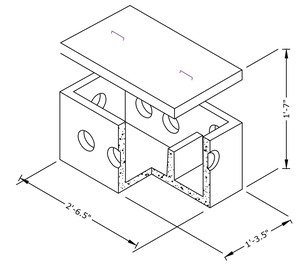

OPTIONAL 12" RISER

NOTES

1. DISTRIBUTION BOX DETAIL AND SPECIFICATIONS SHOWN PER "5 OUTLET BAFFLE BOX", MANUFACTURED BY OLD CASTLE.
2. SPEED LEVELERS ARE TO BE PROVIDED ON EVERY OUTLET.
3. CONCRETE: 4,000 PSI MINIMUM AFTER 28 DAYS.
4. BAFFLE SHALL BE PRECAST WITH DISTRIBUTION BOX
5. DISTRIBUTION BOX SHOULD BE SET ON 12" OF PEA GRAVEL OR GRAVEL BEDDING

PRECAST CONCRETE DISTRIBUTION BOX

DETAIL	3
NO SCALE	-

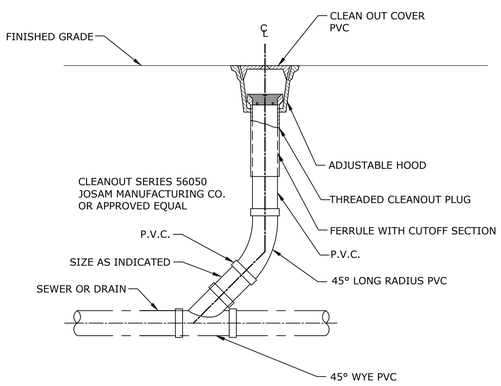

PVC CLEANOUT

DETAIL	4
NO SCALE	-

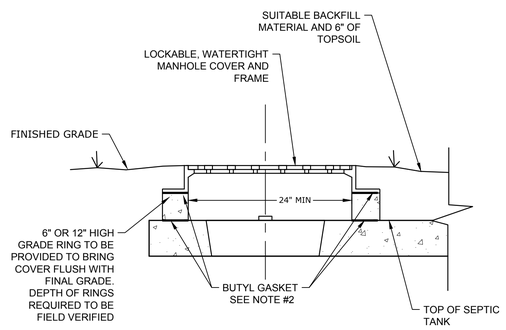

NOTES

1. MANHOLE COVER AND FRAME IS TO BE 24" REVOLUTION BOLTED AND GASKETED WATER TIGHT L1 ACCESS ASSEMBLY 5" TALL FRAME SANITARY SEWER. PRODUCT NUMBER 00104174R01 AS MANUFACTURED BY EJ CASTINGS, OR APPROVED EQUAL.
2. BUTYL GASKET TO BE PROVIDED BETWEEN ALL ELEMENTS THAT ARE NOT ALREADY WATER TIGHT. GASKET SHALL BE PROVIDED BETWEEN GRADE RING AND TOP OF TANK AND BETWEEN CAST IRON FRAME AND GRADE RING.

MANHOLE FRAME AND COVER

DETAIL	5
NO SCALE	-

Tighe&Bond

PERMIT SET NOT FOR CONSTRUCTION

THIS DOCUMENT IS INCOMPLETE AND IS RELEASED TEMPORARILY FOR PROGRESS REVIEW ONLY. IT IS NOT INTENDED FOR BIDDING OR CONSTRUCTION PURPOSES.

Phase 1A Improvements

The Charlton School

Charlton, NY

SERVICES PROVIDED IN NEW YORK BY T&B ENGINEERING AND LANDSCAPE ARCHITECTURE, P.C.

UNAUTHORIZED ALTERNATIONS TO THIS DOCUMENT IS A VIOLATION OF SECTION 7209 OF THE NEW YORK STATE EDUCATION LAW.

MARK	DATE	DESCRIPTION

PROJECT NO:	C5112-002
DATE:	6/16/2023
FILE:	C5112-001 Details.dwg
DRAWN BY:	CJR
CHECKED BY:	BKN
APPROVED BY:	---

SITE DETAILS - 2

SCALE: NO SCALE

C-502

SHEET 10 OF 15

Last Saved: 6/29/2023
Plotted On:Jun 29, 2023-3:56pm By: RLewis
Tighe & Bond:J:\C\C5112 The Charlton School\Drawings_Figures\AutoCAD\Sheet\C5112-001 Details.dwg

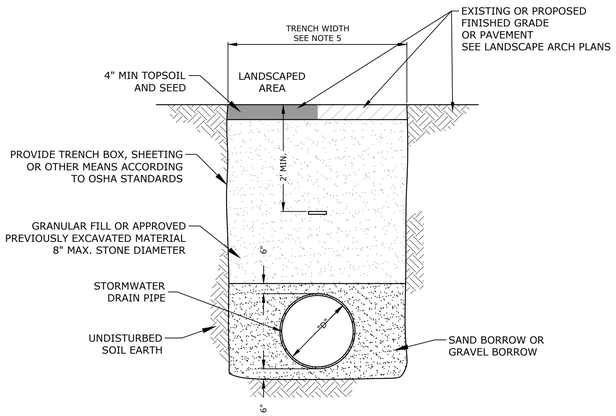

NOTES

1. SEE UTILITY PLAN FOR PIPE SIZE AND TYPE.
2. PROVIDE 1' MINIMUM COVER FOR STORMWATER PIPES.
3. COMPACT ALL BACKFILL MATERIAL WITH VIBRATORY PLATE EQUIPMENT (MINIMUM TWO PASSES) TO A MINIMUM DENSITY OF 95 PERCENT OF THE STANDARD PROCTOR DENSITY AS DETERMINED BY ASTM D698.
4. PLACE BACKFILL MATERIAL IN MAXIMUM ONE FOOT LIFTS.

TYPICAL STORMWATER TRENCH

DETAIL	1
NO SCALE	-

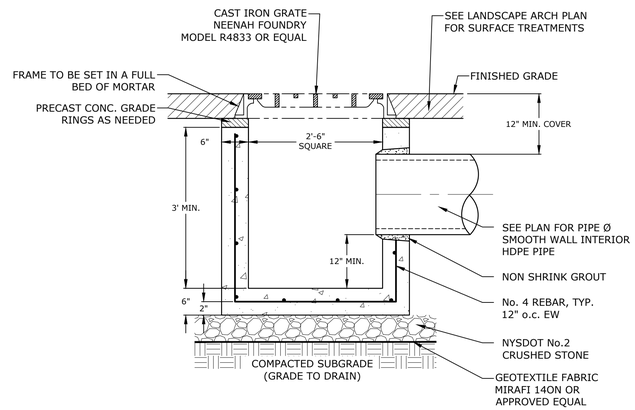

NOTES

1. PRECAST CONCRETE CATCH BASIN DEPTH PER PLANS.
2. PRECAST REINFORCED CONCRETE CATCH BASIN CONFORMING TO ASTM DESIGNATION C-478, 5,000 PSI - 28 DAYS 5% AIR ENTRAINED AASHTO HS20-44 LOADING.

PRECAST CONCRETE CATCH BASIN

DETAIL	2
NO SCALE	-

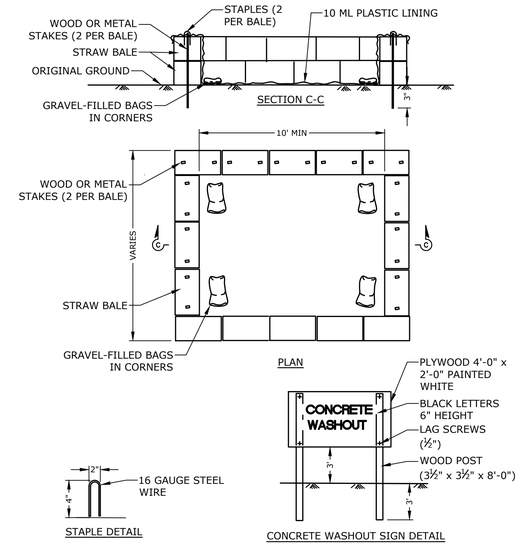

CONCRETE WASHOUT

DETAIL	3
NO SCALE	-

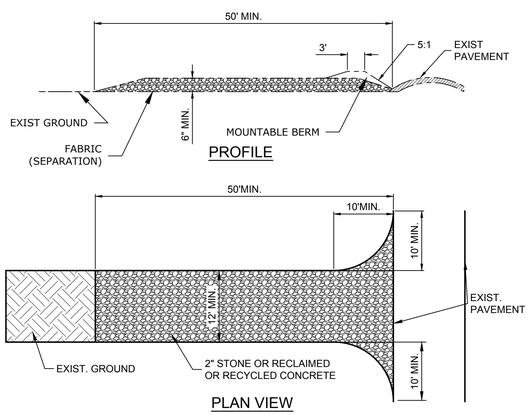

NOTES

1. STONE SIZE - USE 2" STONE, OR RECLAIMED OR RECYCLED CONCRETE OR EQUIVALENT.
2. LENGTH - NOT LESS THAN 50 FEET.
3. THICKNESS - NOT LESS THAN 6 INCHES.
4. WIDTH - TWELVE (12') FEET MINIMUM. BUT NOT LESS THAN THE FULL WIDTH AT POINTS WHERE INGRESS OR EGRESS OCCURS. TWENTY-FOUR (24') FOOT IF SINGLE ENTRANCE TO SITE.
5. FILTER FABRIC (SEPARATION) - WILL BE PLACED OVER THE ENTIRE AREA PRIOR TO PLACING OF STONE.
6. SURFACE WATER - ALL SURFACE WATER FLOWING OR DIVERTED TOWARD CONSTRUCTION ENTRANCES SHALL BE PIPED ACROSS THE ENTRANCE. IF PIPING IS IMPRACTICAL, A MOUNTABLE BERM WITH 5:1 SLOPES WILL BE PERMITTED.
7. MAINTENANCE - THE ENTRANCE SHALL BE MAINTAINED IN A CONDITION WHICH WILL PREVENT TRACKING OR FLOWING OF SEDIMENT ONTO PUBLIC RIGHT-OF-WAY. ALL SEDIMENT SPILLED, DROPPED, WASHED OR TRACKED ONTO PUBLIC RIGHT-OF-WAY MUST BE REMOVED IMMEDIATELY.
8. WHEN WASHING IS REQUIRED, IT SHALL BE DONE ON AN AREA STABILIZED WITH STONE AND WHICH DRAINS INTO AN APPROVED SEDIMENT TRAPPING DEVICE.
9. PERIODIC INSPECTION AND NEEDED MAINTENANCE SHALL BE PROVIDED AFTER EACH RAIN.

STABILIZED CONSTRUCTION ENTRANCE

DETAIL	4
NO SCALE	-

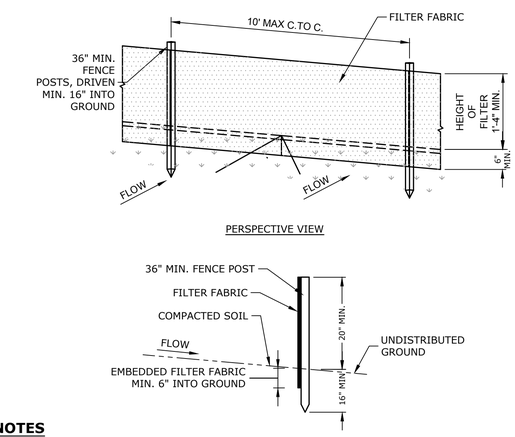

NOTES

1. POSTS: STEEL EITHER "T" OR "U" TYPE OR SOUND HARDWOOD WITH A CROSS SECTIONAL AREA EQUAL TO 3.0 SQUARE INCHES
2. FILTER FABRIC: TENCATE MIRAFI 100X OR APPROVED EQUAL.
3. SILT FENCE TO BE FASTENED SECURELY TO FENCE POSTS WITH WIRE TIES OR STAPLES.
4. WHEN TWO SECTIONS OF FILTER FABRIC ADJOIN EACH OTHER THEY SHALL BE OVERLAPPED BY SIX INCHES AND FOLDED.
5. MAINTENANCE SHALL BE PERFORMED AS NEEDED AND MATERIAL REMOVED WHEN "BULGES" DEVELOP IN THE SILT FENCE.
6. TYPES OF SILT FENCE AS SHOWN IN THE SILT FENCE SLOPE TABLE ARE AS DEFINED BY THE NEW YORK STATE STANDARDS AND SPECIFICATION FOR EROSION AND SEDIMENT CONTROL DATED NOVEMBER 2016 OR CURRENT.

SILT FENCE

DETAIL	5
NO SCALE	-

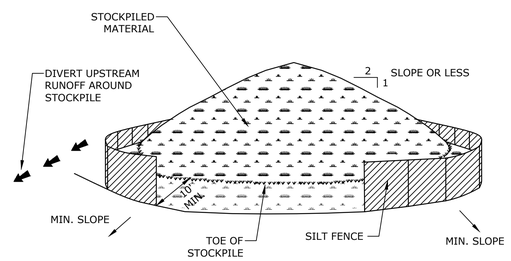

NOTES

1. AREA CHOSEN FOR STOCKPILING OPERATIONS SHALL BE DRY AND STABLE.
2. MAXIMUM SLOPE OF STOCKPILE SHALL BE 2H:1V.
3. SILT FENCE TO EXTEND AROUND ENTIRE PERIMETER OF STOCKPILE OR TO EXTEND AROUND DOWNSTREAM PORTION IF STOCKPILE IS ON SLOPE.
4. TOPSOIL AND FILL THAT IS TO REMAIN STOCKPILE ON-SITE FOR PERIODS GREATER THAN 14 DAYS SHALL BE STABILIZED BY SEEDING. PRIOR TO SEEDING, THE STOCKPILE TOPSOIL MATERIALS SHALL BE GRADED AS NEEDED TO PERMIT THE USE OF CONVENTIONAL EQUIPMENT FOR SEEDED PREPARATION, SEEDING, MULCH APPLICATION, AND MULCH ANCHORING. IN NO CASE SHALL MATERIALS BE STOCKPILED WITHIN 25 FEET OF ANY DITCH, STREAM OR OTHER SURFACE WATER.

STABILIZED STOCKPILE AREA

DETAIL	6
NO SCALE	-

Tighe&Bond

PERMIT SET NOT FOR CONSTRUCTION

THIS DOCUMENT IS INCOMPLETE AND IS RELEASED TEMPORARILY FOR PROGRESS REVIEW ONLY. IT IS NOT INTENDED FOR BIDDING OR CONSTRUCTION PURPOSES.

Phase 1A Improvements

The Charlton School

Charlton, NY

SERVICES PROVIDED IN NEW YORK BY T&B ENGINEERING AND LANDSCAPE ARCHITECTURE, P.C.

UNAUTHORIZED ALTERNATIONS TO THIS DOCUMENT IS A VIOLATION OF SECTION 7209 OF THE NEW YORK STATE EDUCATION LAW.

MARK	DATE	DESCRIPTION

PROJECT NO:	C5112-002
DATE:	6/16/2023
FILE:	C5112-001 Details.dwg
DRAWN BY:	CJR
CHECKED BY:	BKN
APPROVED BY:	---

SITE DETAILS - 3

SCALE: NO SCALE

C-503

SHEET 11 OF 15

Last Saved: 6/29/2023
Plotted On:Jun 29, 2023-6:44pm By: CRokos
Tighe & Bond: J:\C\C5112 The Charlton School\Drawings_Figures\AutoCAD\Sheet\C5112-001 Details.dwg

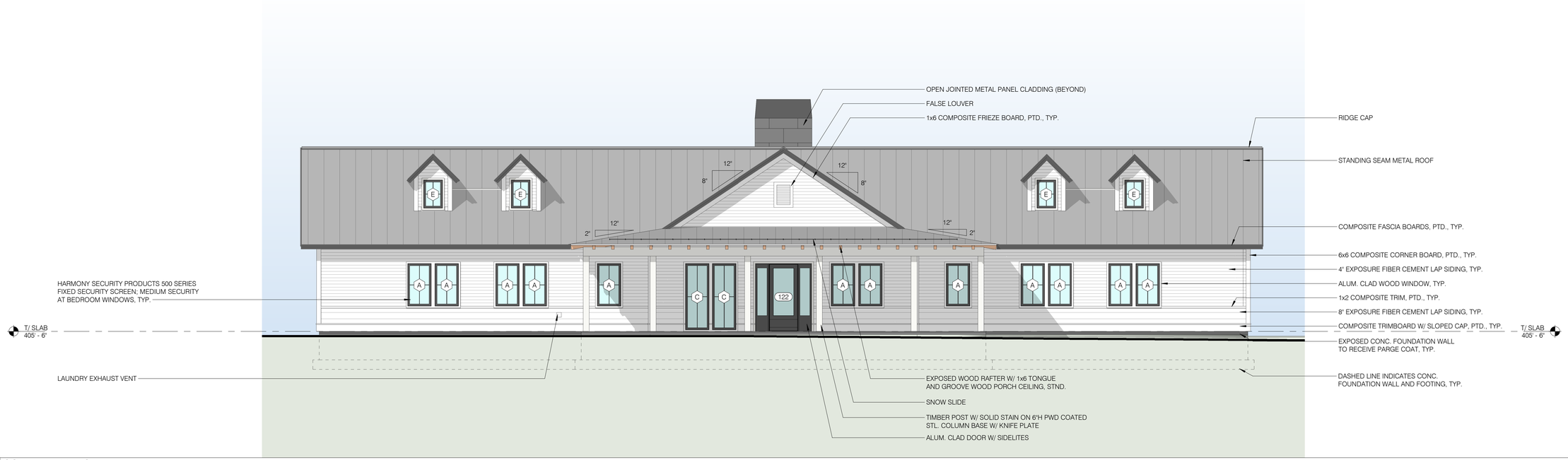

1 SOUTH ELEVATION
3/16" = 1'-0"

2 NORTH ELEVATION
3/16" = 1'-0"

NOT FOR CONSTRUCTION

Seal:

USE OF ARCHITECTS DOCUMENTS:

THESE DOCUMENTS PREPARED BY THE ARCHITECT ARE INSTRUMENTS OF SERVICE FOR USE SOLELY WITH RESPECT TO THIS PROJECT, AND SHALL REMAIN THE PROPERTY OF THE ARCHITECT. THE ARCHITECT SHALL RETAIN ALL COMMON LAW, STATUTORY AND OTHER RESERVED RIGHTS INCLUDING THE COPYRIGHT(S). THE OWNER SHALL NOT REUSE OR PERMIT THE REUSE OF THESE DOCUMENTS INCLUDING ANY DESIGN & CONSTRUCTION DEVELOPMENT, CHANGES OR ALTERATIONS TO THESE DOCUMENTS WITHOUT THE WRITTEN ACKNOWLEDGEMENT AND AUTHORIZATION OF THE ARCHITECT

BALZER & TUCK
from your perspective
ARCHITECTURE

468 BROADWAY SARATOGA SPRINGS, NY
P 518.581.0818

OWNER :
THE CHARLTON SCHOOL
322 LAKE HILL RD
BURNT HILLS, NY 12027

Consultant Logo

GENERAL CONTRACTOR
LECHASE CONSTRUCTION SERVICES, LLC
220 HARBORSIDE DR. SUITE 301
SCHENECTADY, NY 12305
518.388.9200

LANDSCAPE ARCHITECT
WAGNER HODGSON LANDSCAPE ARCHITECTURE
430 WARREN ST.
HUDSON, NY 12534
518.567.1791

SITE / CIVIL ENGINEER
TIGHE & BOND
53 SOUTHAMPTON RD.
WESTFIELD, MA 01085
413.562.1600

STRUCTURAL ENGINEER
SB ENGINEERING, PLLC
900 RT. 146
CLIFTON PARK, NY 12065
518.724.0733

MEP ENGINEER
HUSTON ENGINEERING, LLC
500 FEDERAL ST. # 400
TROY, NY 12180
518.326.0369

STUDENT DORMITORY

322 LAKE HILL RD,
BURNT HILLS, NY 12027

No.	Description	Date

PROGRESS:
SCHEMATIC DESIGN | DESIGN DEVELOPMENT | CONSTRUCTION DOCUMENTS

Project Number	2234
Drawn by	PU/NV
Checked by	BB
Date	06.16.23

EXTERIOR ELEVATIONS

A201

6/15/2023 3:37:26 PM

1 EAST ELEVATION
3/16" = 1'-0"

2 WEST ELEVATION
3/16" = 1'-0"

NOT FOR CONSTRUCTION

Seal:

USE OF ARCHITECTS DOCUMENTS:

THESE DOCUMENTS PREPARED BY THE ARCHITECT ARE INSTRUMENTS OF SERVICE FOR USE SOLELY WITH RESPECT TO THIS PROJECT, AND SHALL REMAIN THE PROPERTY OF THE ARCHITECT. THE ARCHITECT SHALL RETAIN ALL COMMON LAW, STATUTORY AND OTHER RESERVED RIGHTS INCLUDING THE COPYRIGHT(S). THE OWNER SHALL NOT REUSE OR PERMIT THE REUSE OF THESE DOCUMENTS INCLUDING ANY DESIGN & CONSTRUCTION DEVELOPMENT, CHANGES OR ALTERATIONS TO THESE DOCUMENTS WITHOUT THE WRITTEN ACKNOWLEDGEMENT AND AUTHORIZATION OF THE ARCHITECT

BALZER & TUCK
from your perspective
ARCHITECTURE

468 BROADWAY SARATOGA SPRINGS, NY
P 518.581.8818

OWNER :
THE CHARLTON SCHOOL
322 LAKE HILL RD
BURNT HILLS, NY 12027

Consultant Logo

GENERAL CONTRACTOR
LECHASE CONSTRUCTION SERVICES, LLC
220 HARBORSIDE DR. SUITE 301
SCHENECTADY, NY 12305
518.388.9200

LANDSCAPE ARCHITECT
WAGNER HODGSON LANDSCAPE ARCHITECTURE
430 WARREN ST.
HUDSON, NY 12534
518.567.1791

SITE / CIVIL ENGINEER
TIGHE & BOND
53 SOUTHAMPTON RD.
WESTFIELD, MA 01085
413.562.1600

STRUCTURAL ENGINEER
SB ENGINEERING, PLLC
900 RT. 146
CLIFTON PARK, NY 12065
518.724.0733

MEP ENGINEER
HUSTON ENGINEERING, LLC
500 FEDERAL ST. #400
TROY, NY 12180
518.326.0369

STUDENT DORMITORY

322 LAKE HILL RD,
BURNT HILLS, NY 12027

No.	Description	Date

PROGRESS:
SCHEMATIC DESIGN | DESIGN DEVELOPMENT | CONSTRUCTION DOCUMENTS

Project Number	2234
Drawn by	PU/NV
Checked by	BB
Date	06.16.23

EXTERIOR ELEVATIONS

A202

6/15/2023 3:37:32 PM

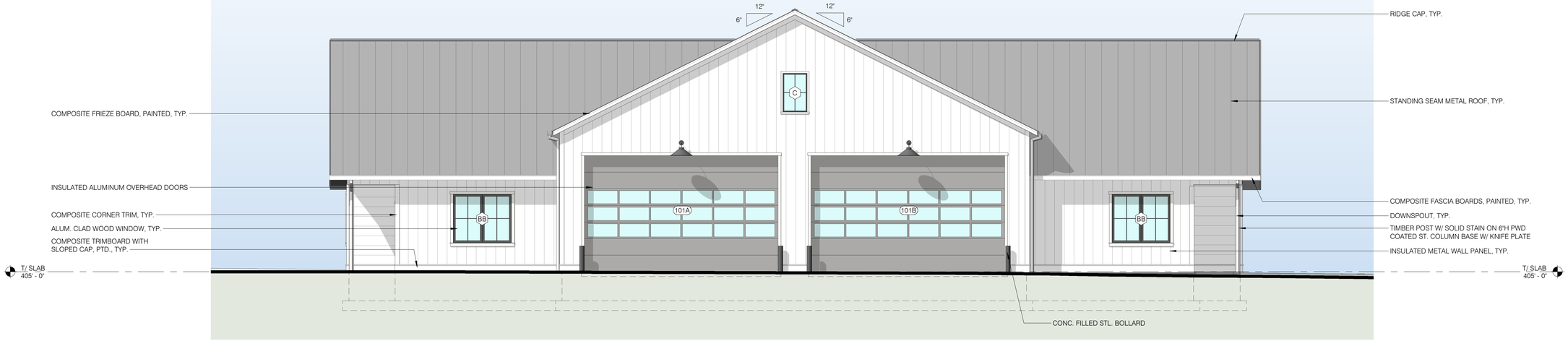

1 SOUTH ELEVATION
3/16" = 1'-0"

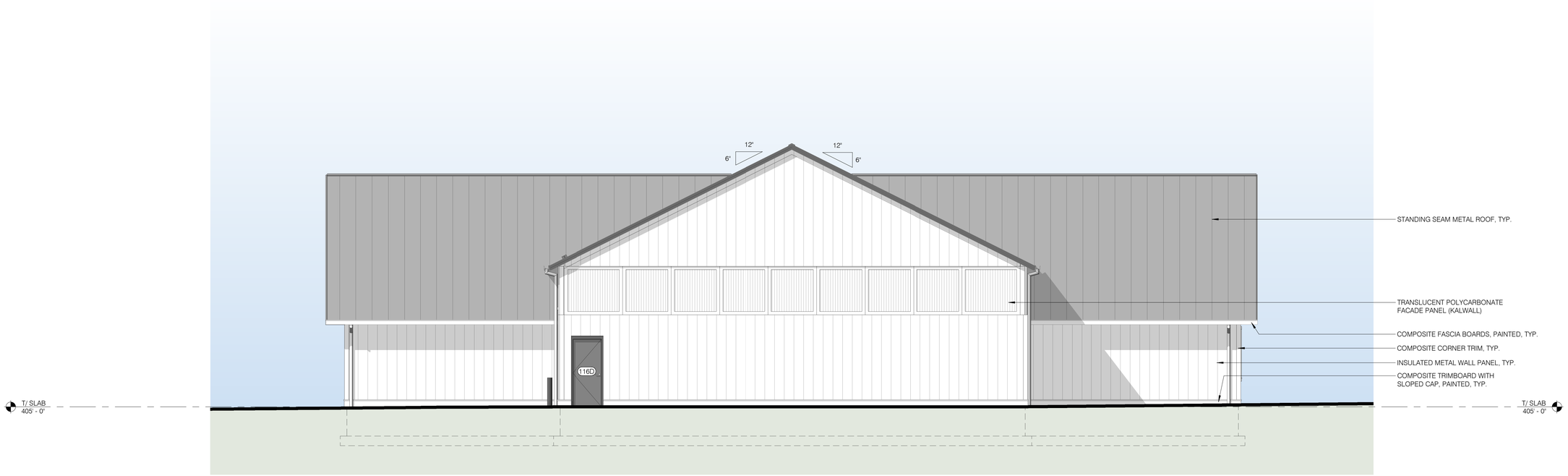

2 NORTH ELEVATION
3/16" = 1'-0"

NOT FOR CONSTRUCTION

Seal:

USE OF ARCHITECTS DOCUMENTS:

THESE DOCUMENTS PREPARED BY THE ARCHITECT ARE INSTRUMENTS OF SERVICE FOR USE SOLELY WITH RESPECT TO THIS PROJECT, AND SHALL REMAIN THE PROPERTY OF THE ARCHITECT. THE ARCHITECT SHALL RETAIN ALL COMMON LAW, STATUTORY AND OTHER RESERVED RIGHTS INCLUDING THE COPYRIGHT(S). THE OWNER SHALL NOT REUSE OR PERMIT THE REUSE OF THESE DOCUMENTS INCLUDING ANY DESIGN & CONSTRUCTION DEVELOPMENT, CHANGES OR ALTERATIONS TO THESE DOCUMENTS WITHOUT THE WRITTEN ACKNOWLEDGEMENT AND AUTHORIZATION OF THE ARCHITECT

BALZER & TUCK
from your perspective
ARCHITECTURE

468 BROADWAY SARATOGA SPRINGS, NY
P 518.581.0818

OWNER :
THE CHARLTON SCHOOL
322 LAKE HILL RD
BURNT HILLS, NY 12027

Consultant Logo

GENERAL CONTRACTOR
LECHASE CONSTRUCTION SERVICES, LLC
220 HARBORSIDE DR. SUITE 301
SCHENECTADY, NY 12305
518.388.9200

LANDSCAPE ARCHITECT
WAGNER HODGSON LANDSCAPE ARCHITECTURE
430 WARREN ST.
HUDSON, NY 12534
518.567.1791

SITE / CIVIL ENGINEER
TIGHE & BOND
53 SOUTHAMPTON RD.
WESTFIELD, MA 01085
413.562.1600

STRUCTURAL ENGINEER
SB ENGINEERING, PLLC
900 RT. 146
CLIFTON PARK, NY 12065
518.724.0733

MEP ENGINEER
HUSTON ENGINEERING, LLC
500 FEDERAL ST. #400
TROY, NY 12180
518.326.0369

MAINTENANCE BUILDING

322 LAKE HILL RD.
BURNT HILLS, NY 12027

No.	Description	Date

PROGRESS:
SCHEMATIC DESIGN | DESIGN DEVELOPMENT | CONSTRUCTION DOCUMENTS

Project Number	2234
Drawn by	PU/NV
Checked by	BB
Date	06.16.23

EXTERIOR ELEVATIONS

A203

6/16/2023 11:38:38 AM

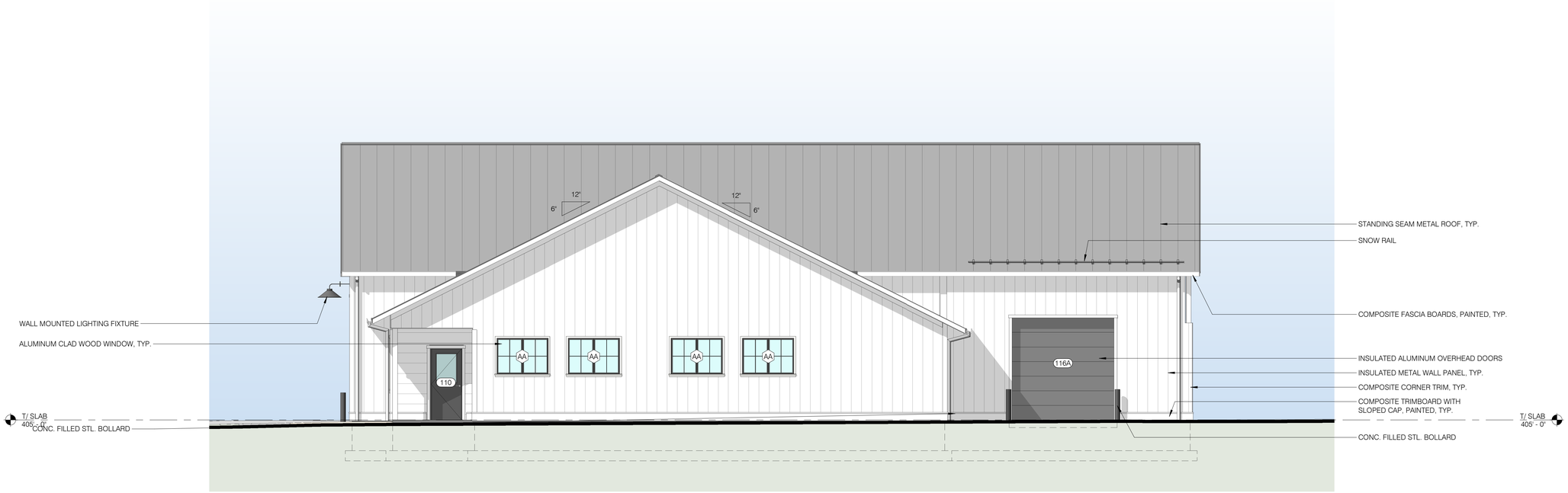

1 EAST ELEVATION
3/16" = 1'-0"

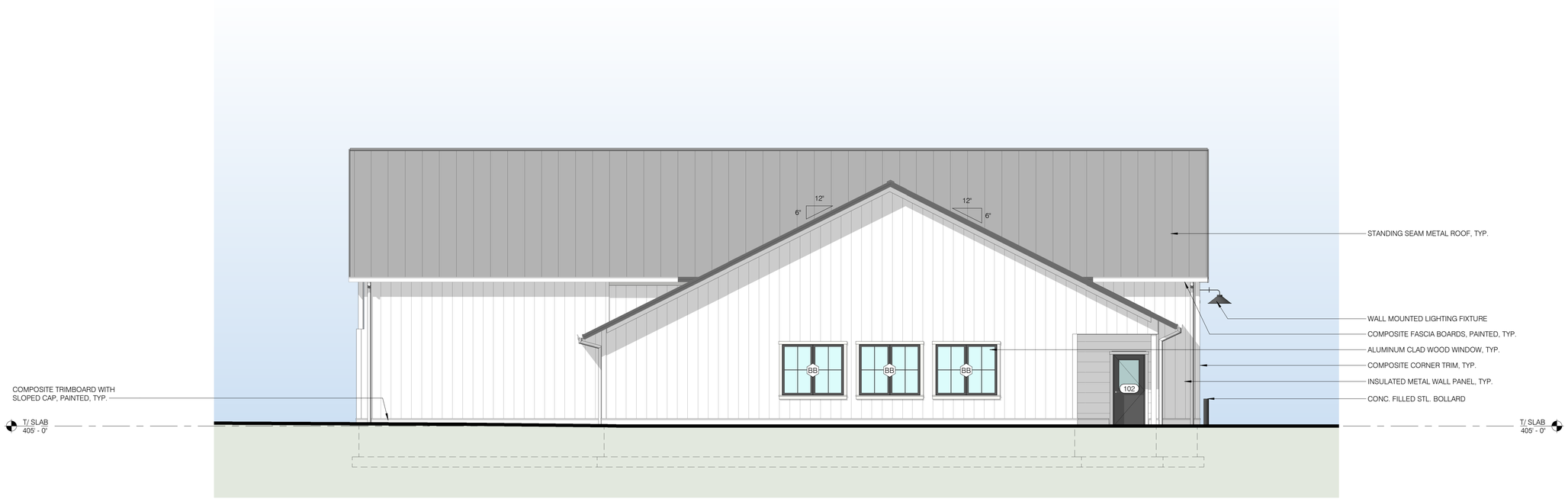

2 WEST ELEVATION
3/16" = 1'-0"

NOT FOR CONSTRUCTION

Seal:

USE OF ARCHITECTS DOCUMENTS:

THESE DOCUMENTS PREPARED BY THE ARCHITECT ARE INSTRUMENTS OF SERVICE FOR USE SOLELY WITH RESPECT TO THIS PROJECT, AND SHALL REMAIN THE PROPERTY OF THE ARCHITECT. THE ARCHITECT SHALL RETAIN ALL COMMON LAW, STATUTORY AND OTHER RESERVED RIGHTS INCLUDING THE COPYRIGHT(S). THE OWNER SHALL NOT REUSE OR PERMIT THE REUSE OF THESE DOCUMENTS INCLUDING ANY DESIGN & CONSTRUCTION DEVELOPMENT, CHANGES OR ALTERATIONS TO THESE DOCUMENTS, WITHOUT THE WRITTEN ACKNOWLEDGEMENT AND AUTHORIZATION OF THE ARCHITECT

BALZER & TUCK
from your perspective
ARCHITECTURE

468 BROADWAY SARATOGA SPRINGS, NY
P 518.581.0818

OWNER :
THE CHARLTON SCHOOL
322 LAKE HILL RD
BURNT HILLS, NY 12027

Consultant Logo

GENERAL CONTRACTOR
LECHASE CONSTRUCTION SERVICES, LLC
220 HARBORSIDE DR. SUITE 301
SCHENECTADY, NY 12305
518.388.9200

LANDSCAPE ARCHITECT
WAGNER HODGSON LANDSCAPE ARCHITECTURE
430 WARREN ST.
HUDSON, NY 12534
518.567.1791

SITE / CIVIL ENGINEER
TIGHE & BOND
53 SOUTHAMPTON RD.
WESTFIELD, MA 01085
413.562.1600

STRUCTURAL ENGINEER
SB ENGINEERING, PLLC
900 RT. 146
CLIFTON PARK, NY 12065
518.724.0733

MEP ENGINEER
HUSTON ENGINEERING, LLC
500 FEDERAL ST. #400
TROY, NY 12180
518.326.0369

MAINTENANCE BUILDING

322 LAKE HILL RD.
BURNT HILLS, NY 12027

No.	Description	Date

PROGRESS:
SCHEMATIC DESIGN | DESIGN DEVELOPMENT | CONSTRUCTION DOCUMENTS

Project Number	2234
Drawn by	PU/NV
Checked by	BB
Date	06.16.23

EXTERIOR ELEVATIONS

A204

6/16/2023 11:38:42 AM

Tighe&Bond

APPENDIX C

TOWN VILLAGE CITY OF Charlton Application #_____
(circle one)

Agricultural Data Statement

Date _____

Instructions: This form must be completed for any application for a special use permit, site plan approval, use variance or a subdivision approval requiring municipal review that would occur on property within 500 feet of a farm operation located in a NYS Dept. of Ag & Markets certified Agricultural District.

Applicant	Owner if Different from Applicant
Name: The Charlton School Address: PO Box 47 Burnt Hills, NY 12027	Name: Address:

1. Type of Application: ☐ Special Use Permit; ■ Site Plan Approval ; ☐ Use Variance; ☐ Subdivision Approval
   (circle one or more)

2. Description of proposed project: In this project's phase (1A) proposed improvements will include the construction of four new dorms, a maintenance garage, and a reconfigured roadway for access; demolition of Clemens Cottage, one maintenance building, and a shed; the connection of some utilities; and the implementation of four (4) stormwater management areas. This project will support future students and staff members to improve the School's educational quality.

3. Location of project: Address: 322 Lake Hill Road in the Town of Charlton, Saratoga County, NY
   Tax Map Number (TMP) 256.-1-38

4. Is this parcel within an Agricultural District? ☐ NO ■ YES (Check with your local assessor if you do not know)
5. If YES, Agricultural District Number Ag District 2
6. Is this parcel actively farmed? ☐ NO ■ YES
7. List all farm operations within 500 feet of your parcel. Attach additional sheets if necessary.
   SEE ATTACHED SHEET FOR ALL PARCELS WITHIN 500'

Name: The Charlton School Address: 322 Lake Hill Road, Charlton NY Is this parcel actively farmed? ☐ NO ■ YES	Name: Address: Is this parcel actively farmed? ☐ NO ☐ YES
Name: Address: Is this parcel actively farmed? ☐ NO ☐ YES	Name: Address: Is this parcel actively farmed? ☐ NO ☐ YES

Signature of Applicant

Signature of Owner (if other than applicant)

Reviewed by: _____ _____
Signature of Municipal Official Date

NOTE TO REFERRAL AGENCY: County Planning Board review is required. A copy of the Agricultural Data Statement must be submitted along with the referral to the County Planning Department.

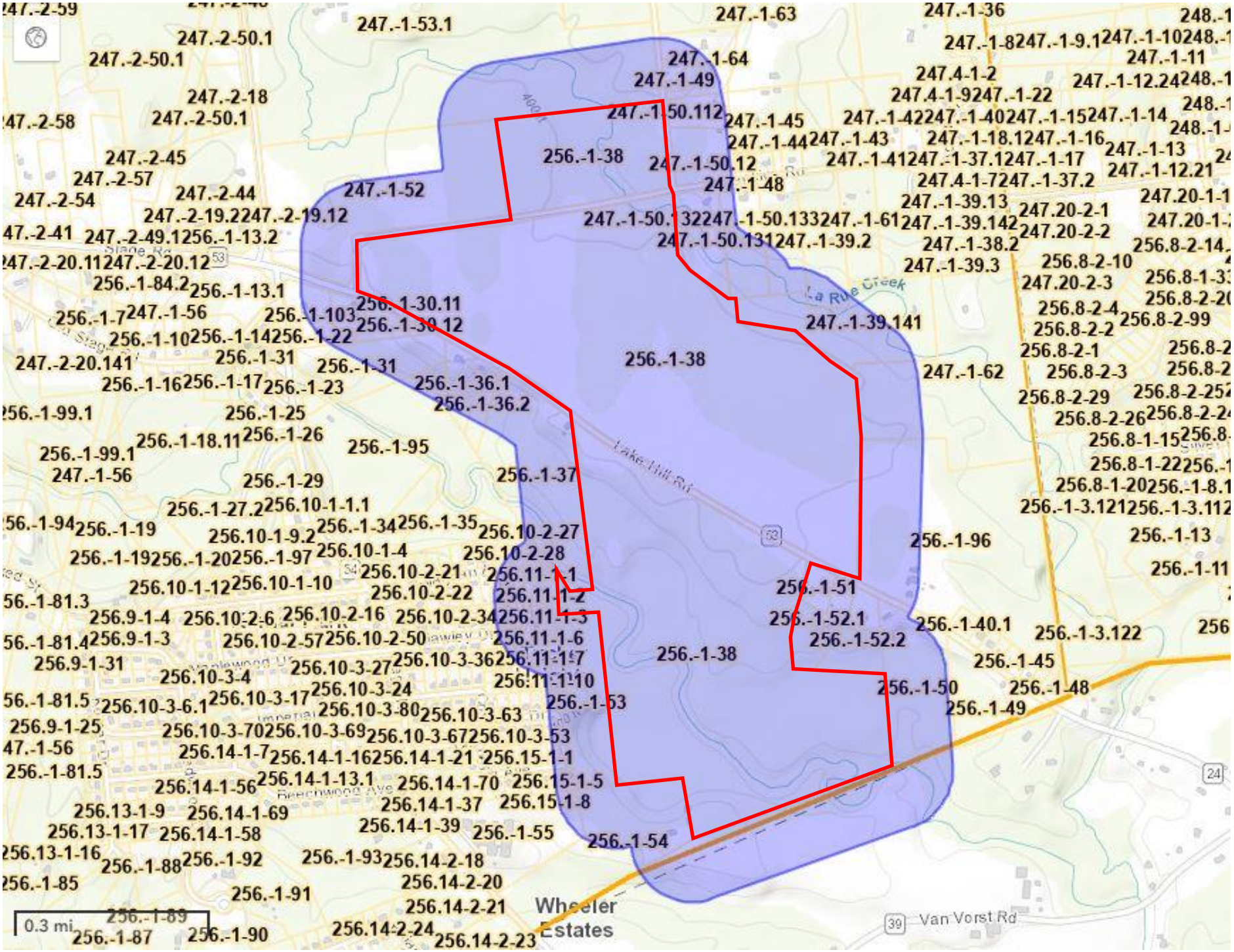
247.-2-59
247.-2-50.1
247.-2-50.1
247.-1-53.1
247.-1-63
247.-1-36
247.-1-8
247.-1-9.1
247.-1-10
248.-1
247.-1-11
247.-1-64
247.-1-49
247.4-1-2
247.-1-12.24
247.4-1-9
247.-1-22
247.-2-18
247.-2-58
247.-2-50.1
247.-1-50.112
247.-1-45
247.-1-42
247.-1-40
247.-1-15
247.-1-14
247.-1-44
247.-1-43
247.-1-18.1
247.-1-16
247.-1-13
247.-2-45
256.-1-38
247.-1-50.12
247.-1-41
247.-1-37.1
247.-1-17
247.-1-12.21
247.-2-57
247.-1-48
247.4-1-7
247.-1-37.2
247.-2-54
247.-2-44
247.-1-52
247.-1-39.13
247.20-1-1
247.-2-19.2
247.-2-19.12
247.-1-50.132
247.-1-50.133
247.-1-61
247.-1-39.142
247.20-2-1
247.20-2-2
247.-2-41
247.-2-49.1
256.-1-13.2
247.-1-50.131
247.-1-39.2
247.-1-38.2
256.8-2-14
247.-2-20.11
247.-2-20.12
247.-1-39.3
256.8-2-10
256.-1-84.2
256.-1-13.1
247.20-2-3
256.8-1-3
La Rue Creek
256.-1-30.11
256.8-2-4
256.8-2-20
256.-1-7
247.-1-56
256.-1-103
256.-1-30.12
247.-1-39.141
256.8-2-99
256.-1-10
256.-1-14
256.-1-22
256.8-2-2
256.8-2-1
256.8-2
247.-2-20.141
256.-1-31
256.-1-31
256.-1-38
247.-1-62
256.8-2-3
256.8-2
256.-1-16
256.-1-17
256.-1-23
256.-1-36.1
256.8-2-29
256.8-2-25
256.-1-36.2
256.-1-99.1
256.-1-25
256.8-2-26
256.8-2-2
256.-1-18.11
256.-1-26
256.-1-95
256.8-1-15
256.8-
256.-1-99.1
256.8-1-22
256.-1
247.-1-56
256.-1-29
256.-1-37
256.8-1-20
256.-1-8.1
256.-1-27.2
256.10-1-1.1
256.-1-3.121
256.-1-3.112
256.-1-94
256.-1-19
256.10-1-9.2
256.-1-34
256.-1-35
256.10-2-27
256.-1-96
256.-1-13
256.-1-19
256.-1-20
256.-1-97
256.10-1-4
256.10-2-28
256.-1-11
256.10-2-21
256.11-1-1
256.10-1-12
256.10-1-10
256.10-2-22
256.11-1-2
256.-1-51
256.-1-81.3
256.9-1-4
256.10-2-6
256.10-2-16
256.10-2-34
256.11-1-3
256.-1-52.1
256.-1-40.1
256.-1-3.122
256.-1-81.4
256.9-1-3
256.10-2-57
256.10-2-50
256.11-1-6
256.-1-52.2
256.9-1-31
256.10-3-36
256.11-1-7
256.-1-38
256.-1-45
256.10-3-4
256.10-3-27
256.11-1-10
256.-1-81.5
256.10-3-6.1
256.10-3-17
256.10-3-24
256.-1-53
256.-1-50
256.-1-48
256.10-3-80
256.10-3-63
256.-1-49
256.9-1-25
256.10-3-70
256.10-3-69
256.10-3-67
256.10-3-53
47.-1-56
256.14-1-7
256.14-1-16
256.14-1-21
256.15-1-1
256.-1-81.5
256.14-1-13.1
256.14-1-70
256.15-1-5
256.14-1-56
256.14-1-37
256.15-1-8
256.13-1-9
256.14-1-69
256.14-1-39
256.13-1-17
256.14-1-58
256.-1-55
256.-1-54
256.13-1-16
256.-1-88
256.-1-92
256.-1-93
256.14-2-18
256.-1-85
256.14-2-20
256.-1-91
256.14-2-21
Wheeler Estates
0.3 mi
256.-1-89
256.-1-87
256.-1-90
256.14-2-24
256.14-2-23
Van Vorst Rd
53
39
24

PARCEL ID	MUNI	PROP_ADDR	ROLL_ YEAR	OWNER	MAIL_1ADDR	MAIL_CITY	MAIL_S TATE	MAIL_ZI	ACRES	FRONTAGE	DEPTH	PROP_CLASS
256.-1-35	Charlton	224 STAGE RD	2023	COTE, LAURA K	224 Stage Rd	Ballston Lake	NY	12019	6.74	177.77	0	1 Family Res
256.-1-95	Charlton	262 STAGE RD	2023	FARRELL, JOHN R	262 Stage Rd	Ballston Lake	NY	12019	32.28	1290	0	Rural res
256.-1-96	Charlton	290 LAKE HILL RD	2023	RATHGEBER, KEVIN	290 Lake Hill Rd	Burnt Hills	NY	12027	47.68	822.87	0	Kennel / vet
256.-1-103	Charlton	286 STAGE RD	2023	MHP PROPERTIRES LLC	286 Stage Rd	Charlton	NY	12019	4.1	591.48	0	Prof. bldg.
256.10-3-42	Charlton	2 MARVIN DR	2023	KARBOWSKI, MICHAEL A	2 Marvin Dr	Charlton	NY	12019	0.49	97	0	1 Family Res
256.10-3-43	Charlton	4 MARVIN DR	2023	BRINO, CHRISTOPHER M	4 Marvin Dr	Charlton	NY	12019	0.45	90	220	1 Family Res
256.-1-36.1	Charlton	387 LAKE HILL RD	2023	GAZZILLO, BRIAN	387 Lake Hill Rd	Burnt Hills	NY	12027	3.02	290	0	1 Family Res
256.-1-36.2	Charlton	383 LAKE HILL RD	2023	GELINAS, LEWIS A	383 Lake Hill Rd	Burnt Hills	NY	12027	2.38	210	0	1 Family Res
256.-1-37	Charlton	369 LAKE HILL RD	2023	GOODY, PAUL W	369 Lake Hill Rd	Charlton	NY	12019	21.8	735	0	Rural res
256.-1-38	Charlton	322 LAKE HILL RD	2023	THE CHARLTON SCHOOL	PO Box 47	Burnt Hills	NY	12027	267.12	4650	0	Correctional
256.-1-50	Charlton	293 LAKE HILL RD	2023	COTNOIR, ANDREW	293 Lakehill Rd	Charlton	NY	12019	13.6	633.61	0	Rural res
256.-1-51	Charlton	303 LAKE HILL RD	2023	BOOTH, PHILIP D	303 Lake Hill Rd	Burnt Hills	NY	12027	1.86	262	0	1 Family Res
256.-1-52.1	Charlton	299 LAKE HILL RD	2023	EARLE, JONATHAN	299 Lake Hill Rd	Charlton	NY	12027	5.09	194.58	0	1 Family Res
256.-1-52.2	Charlton	295 LAKE HILL RD	2023	WILLIAMS, ROBERT A	295 Lake Hill Rd	Charlton	NY	12027	5.09	194.59	0	1 Family Res
256.-1-53	Charlton	CORNELIA AVE	2023	FOGG HOLLOW FARM LLC	166 Stage Rd	Charlton	NY	12019	11.98	470	0	Rural vac>10
256.-1-54	Charlton	166 STAGE RD	2023	FOGG, III, CHARLES H	166 Stage Rd	Charlton	NY	12019	22.98	421.5	0	Rural res
256.10-2-28	Charlton	19 CALLAGHAN BLVD	2023	FEATHERSTONE, JAMES A	19 Callaghan Blvd	Ballston Lake	NY	12019	2.07	185.91	0	1 Family Res
256.10-2-31	Charlton	18 CALLAGHAN BLVD	2023	ROCHFORD, NANCY A	18 Callaghan Blvd	Ballston Lake	NY	12019	0.34	118.89	0	1 Family Res
256.10-2-32	Charlton	24 CALLAGHAN BLVD	2023	CHRISTIE, LYNN	24 Callaghan Blvd	Charlton	NY	12019	0.38	115	0	1 Family Res
256.10-2-33	Charlton	26 CALLAGHAN BLVD	2023	BIKOWICZ, KENNETH R	26 Callaghan Blvd	Charlton	NY	12019	0.39	114.98	0	1 Family Res
256.10-2-34	Charlton	28 CALLAGHAN BLVD	2023	DECONNO, JOSEPH J	28 Callaghan Blvd	Ballston Lake	NY	12019	0.55	115.98	0	1 Family Res
256.-1-30.12	Charlton	LAKE HILL RD	2023	EBERT, LOUANN	405 Lake Hill Rd	Ballston Lake	NY	12019	2.28	584.75	0	Res vac land
256.-1-31	Charlton	STAGE RD	2023	GARVE, ROBERT T	102 Valentine Rd	Ballston Lake	NY	12019	13.55	815	0	Rural vac>10
256.-1-55	Charlton	STAGE RD	2023	PUBLIC SCHOOL DIST	PO Box 1389	Ballston Lake	NY	12019	14.91	920	0	School
256.11-1-1	Charlton	21 CALLAGHAN BLVD	2023	SALISBURY, DOUGLAS A	21 Callaghan Blvd	Charlton	NY	12019	1.04	90	0	1 Family Res
256.11-1-2	Charlton	23 CALLAGHAN BLVD	2023	MUSCANELL, ERIC J	23 Callaghan Blvd	Charlton	NY	12019	0.87	90	341.07	1 Family Res
256.11-1-3	Charlton	25 CALLAGHAN BLVD	2023	NEANDER, PATRICK M	25 Callaghan Blvd	Ballston Lake	NY	12019	0.71	90	0	1 Family Res
256.11-1-4	Charlton	27 CALLAGHAN BLVD	2023	MARTIN, CHRISTOPHER E	27 Callaghan Blvd	Ballston Lake	NY	12019	0.68	98	0	1 Family Res
256.11-1-5	Charlton	29 CALLAGHAN BLVD	2023	GRISENTHWAITE, TODD J	29 Callaghan Blvd	Charlton	NY	12019	0.64	98	0	1 Family Res
256.11-1-6	Charlton	1 MARVIN DR	2023	HUNDERT, RACHEL L	1 Marvin Dr	Charlton	NY	12019	0.84	96.46	0	1 Family Res
256.11-1-7	Charlton	3 MARVIN DR	2023	NELSON, RICHARD E	3 Marvin Dr	Ballston Lake	NY	12019	0.79	90	0	1 Family Res
256.11-1-8	Charlton	5 MARVIN DR	2023	SLOWIKOWSKI, ANN	5 Marvin Dr	Ballston Lake	NY	12019	0.77	90	0	1 Family Res

256.11-1-9	Charlton	7 MARVIN DR	2023	STRAUT, LOUIS G	7 Marvin Dr	Ballston Lake	NY	12019	0.76	90	0	1 Family Res
256.11-1-10	Charlton	9 MARVIN DR	2023	RYBALTOWSKI, MARK	9 Marvin Dr	Ballston Lake	NY	12019	0.89	100.91	0	1 Family Res
256.11-1-13	Charlton	21 CORTLAND DR	2023	NORTHUP, WILLIAM	21 Cortland Dr	Ballston Lake	NY	12019	0.36	90	175	1 Family Res
256.11-1-14	Charlton	23 CORTLAND DR	2023	BAKER, CHARLES	23 Cortland Dr	Ballston Lake	NY	12019	0.36	90	175	1 Family Res
256.11-1-17	Charlton	2 CORNELIA LN	2023	WILLIAMS, KATRYN L	2 Cornelia Ln	Ballston Lake	NY	12019	0.4	177.5	0	1 Family Res
247.-1-62	Charlton	105 JENKINS RD	2023	ASHDOWN, WALTER E	105 Jenkins Rd	Burnt Hills	NY	12027	36.17	85.45	0	Rural res
247.-1-64	Charlton	26 SWEETMAN RD	2023	GLOWA, THEODORE A	26 Sweetman Rd	Burnt Hills	NY	12027	5.83	260.01	0	1 Family Res
247.-1-39.2	Charlton	123 JENKINS RD	2023	DYER, AARON D	123 Jenkins Rd	Charlton	NY	12019	8.74	337.2	0	1 Family Res
247.-1-39.141	Charlton	107 JENKINS RD	2023	ASHDOWN, ANDREW	109 Jenkins Rd	Burnt Hills	NY	12027	18.2	54.05	0	Rural res
247.-1-49	Charlton	18 SWEETMAN RD	2023	LETENDRE, THOMAS J	22 Sweetman Rd	Burnt Hills	NY	12027	1.1	268	0	Res Multiple
247.-1-50.12	Charlton	138 JENKINS RD	2023	LEWIS, RALPH E	138 Jenkins Road	Burnt Hills	NY	12027	5.3	525.8	0	1 Family Res
247.-1-50.112	Charlton	12 SWEETMAN RD	2023	MERCHANT, PETER J	12 Sweetman Rd	Burnt Hills	NY	12027	3.05	235.35	0	1 Family Res
256.15-1-3	Charlton	4 CORNELIA LN	2023	MANGO, CLIFFORD A	4 Cornelia Ln	Ballston Lake	NY	12019	0.41	177.5	0	1 Family Res
256.15-1-4	Charlton	26 CORNELIA AVE	2023	HILDEBRAND, GREGORY L	26 Cornelia Ave	Ballston Lake	NY	12019	0.38	95	0	1 Family Res
256.15-1-5	Charlton	22 CORNELIA AVE	2023	VANPATTEN, JOANNE T	22 Cornelia Ave	Ballston Lake	NY	12019	0.38	95	0	1 Family Res
256.-1-30.11	Charlton	405 LAKE HILL RD	2023	EBERT, LOU ANN	405 Lake Hill Rd	Ballston Lake	NY	12019	2.04	346.61	0	1 Family Res
247.-1-50.131	Charlton	133 JENKINS RD	2023	WAYLETT, BRANDON	133 Jenkins Rd	Burnt Hills	NY	12027	6.75	333.2	0	1 Family Res
247.-1-50.132	Charlton	137 JENKINS RD	2023	JERZAK, JOSEPH	137 Jenkins Rd	Burnt Hills	NY	12027	5.97	364.04	0	1 Family Res
247.-1-50.133	Charlton	127 JENKINS RD	2023	FISCHER, KENNETH C	127 Jenkins Rd	Burnt Hills	NY	12027	6.26	300	0	1 Family Res
247.-1-52	Charlton	102 VALENTINE RD	2023	GARVE, ROBERT T	102 Valentine Rd	Ballston Lake	NY	12019	39.3	920	0	Rural res
247.-1-53.1	Charlton	132 VALENTINE RD	2023	CYPHERS, GLEN C	132 Valentine Rd	Ballston Lake	NY	12019	115	1670	0	Rural res